Contract Number: C03295
Contract Name: PLYMOUTH ER P23-1(327) & PLYMOUTH ER P23-1(328)

VERMONT

AGENCY OF TRANSPORTATION

PROPOSAL

STANDARD SPECIFICATIONS FOR CONSTRUCTION
DATED 2024 SHALL APPLY TO THIS CONTRACT

SPECIAL PROVISIONS

SCHEDULE OF ITEMS

ELECTRONIC BID BOND to be submitted in the amount of 5% of the Contractor's bid.

BIDDING PROCEDURE

Bid Proposals will not be read unless accompanied by an electronic bid bond, and they may be rejected as irregular if they are not in compliance with Agency specifications.

NOTE: All bid proposals shall be properly filled out and submitted electronically utilizing iCX Web System services.

VTrans Mission and Vision
Through excellent customer service, provide for the safe and efficient movement of people and goods.
A safe, reliable, and multimodal transportation system that grows the economy, is affordable to use and operate, and serves vulnerable populations.

Cover Page Proposal 1
Table of Contents 2
Project Special Provisions 3
404 Corps of Engineers Permit - 23b758 14
404 Corps of Engineers Permit - 23b755 59
ANR RME Consultation - 23b758 104
ANR RME Consultation - 23b755 106
Impact Plans - 23b758 108
Impact Plans - 23b755 119
Required Contract Provisions for Federal Aid Construction Contracts FHWA 1273 June 2026 131
USDOL Davis Bacon Wage Rates 2026 - Windsor County 143
Bidding Requirements and Conditions 147
DBE Policy Required Contract Requirements CR110 - 2026 159
Attachment C - Standard State Contract and Grant Provisions Rev 2-13-26 164
USDOT Standard Title VI Nondiscrim Assurances Appendix A and E 174
Standard Federal EEO Construction Contract Specifications 177
Contractor EEO Certification Form - CA109 184
Vermont AOT Certificate of Compliance - CA271 185
Vermont AOT Minimum Labor and Truck Rates - CA101 189
Commodity Index Prices CA170 - Spec Book 2024 190
Proposal Schedule of Pay Items 191

SPECIAL PROVISIONS

1. NOTICE TO BIDDERS – CONTRACT COMPLETION DATE. This Contract shall be completed on or before October 15, 2028.

2. NOTICE TO BIDDERS – INCENTIVE/DISINCENTIVE (I/D) (PLYMOUTH ER P23-1 (327)). In accordance with Subsection 108.10 and as described below, there shall be two Incentive/Disincentive periods on this Contract.

   (a) Dates and Meetings. The allowable I/D work period shall start at 7:00 a.m. and end 42 days later by 6:59 a.m. This 42-day work period is herein defined as the I/D period. The begin construction date for the I/D period shall be determined by the Contractor. However, in no case shall the I/D period begin before 7:00 a.m. on June 21, 2027, and it shall end no later than 6:59 a.m. on August 23, 2027.

   During the I/D period, the Contractor will be allowed to work on the project for 24 hours per day, 7 days per week, including holiday periods. Night work will be allowed during the I/D period. See Notice to Bidders No. 6 for additional information and requirements regarding night work.

   For this Contract, a public information meeting shall be held prior to the start of the I/D period, as described in Subsection 108.10(b).

   (b) Identified Work. All work identified below shall be completed before the end of each I/D period:

      (1) Road shall be open for two-way traffic during nonworking hours;

      (2) Type IIS pavement placed;

      (3) Bridge curb in place, and;

      (4) Permanent bridge rail and guardrail OR approved temporary barrier in place

   None of the work identified above will be allowed to occur outside of the closure period.

   No daily lane closures will be allowed prior to the start of the I/D period, except to progress work for EPSC, traffic control and micropile installation. Contractor will be allowed to maintain one-lane (minimum 12 feet wide including shoulders) alternating two-way traffic. No night work will be allowed prior to the I/D period.

(c) Pay Schedule. The Contractor will receive a lump sum compensation of $113,400 for completing the identified work before the I/D period. If the identified work is not completed before the end of the I/D period, no portion of the lump sum incentive will be paid.

In addition to the lump sum payment, the Contractor will also be compensated at a rate of $135.00 per hour for each hour that the identified work is completed prior to the end of the I/D period, up to a maximum total payment of $136,080.00 (including the lump sum payment). Only whole hours will count toward this extra incentive payment.

For each hour after the end of the I/D period that the identified work remains uncompleted, the Contractor will be assessed a disincentive at a rate of $135.00 per hour. The full hourly disincentive amount will be assessed for each hour during which the identified work is not completed for any portion of the hour. There shall be no maximum on the disincentive amount.

This assessed disincentive is separate from, and will be imposed in addition to, liquidated damages which may be imposed for failure to complete the Contract on time.

Payment for incentive or deduction for disincentive will be made under pay item 199.8101.

3. NOTICE TO BIDDERS – INCENTIVE/DISINCENTIVE (I/D) (PLYMOUTH ER P23-1 (328)). In accordance with Subsection 108.10 and as described below, there shall be two Incentive/Disincentive periods on this Contract.

(a) Dates and Meetings. The allowable I/D work period shall start at 7:00 a.m. and end 42 days later by 6:59 a.m. This 42-day work period is herein defined as the I/D period. The begin construction date for the I/D period shall be determined by the Contractor. However, in no case shall the I/D period begin before 7:00 a.m. on June 19, 2028, and it shall end no later than 6:59 a.m. on August 21, 2028.

During the I/D period, the Contractor will be allowed to work on the project for 24 hours per day, 7 days per week, including holiday periods. Night work will be allowed during the I/D period. See Notice to Bidders No. 6 for additional information and requirements regarding night work.

For this Contract, a public information meeting shall be held prior to the start of the I/D period, as described in Subsection 108.10(b).

(b) Identified Work. All work identified below shall be completed before the end of each I/D period:

(1) Road shall be open for two-way traffic during nonworking hours;

(2) Type IIS pavement placed;

(3) Bridge curb in place, and;

(4) Permanent bridge rail and guardrail OR approved temporary barrier

None of the work identified above will be allowed to occur outside of the closure period.

No daily lane closures will be allowed prior to the start of the I/D period, except to progress work for EPSC, and traffic control. Contractor will be allowed to maintain one-lane (minimum 12 feet wide including shoulders) alternating two-way traffic. No night work will be allowed prior to the I/D period.

(c) Pay Schedule. The Contractor will receive a lump sum compensation of $108,320 for completing the identified work before the I/D period. If the identified work is not completed before the end of the I/D period, no portion of the lump sum incentive will be paid.

In addition to the lump sum payment, the Contractor will also be compensated at a rate of $135.00 per hour for each hour that the identified work is completed prior to the end of the I/D period, up to a maximum total payment of $131,000.00 (including the lump sum payment). Only whole hours will count toward this extra incentive payment.

For each hour after the end of the I/D period that the identified work remains uncompleted, the Contractor will be assessed a disincentive at a rate of $135.00 per hour. The full hourly disincentive amount will be assessed for each hour during which the identified work is not completed for any portion of the hour. There shall be no maximum on the disincentive amount.

This assessed disincentive is separate from, and will be imposed in addition to, liquidated damages which may be imposed for failure to complete the Contract on time.

Payment for incentive or deduction for disincentive will be made under pay item 199.8101.

4. NOTICE TO BIDDERS – PROHIBITION OF RUSSIAN GOODS. The Contractor is hereby notified that, pursuant to Vermont Executive Order No. 02-22, dated March 3rd, 2022, the purchase of Russian-sourced goods and goods produced by Russian entities (defined as institutions or companies that are headquartered in Russia or have their principal place of business in Russia) is prohibited. The awarded Contractor must fill out and sign the Executive Order 02-22 Vendor Certification as part of the Contract awarding process.

5. NOTICE TO BIDDERS – WORK REQUIREMENTS. The Contractor is hereby notified that winter work will be allowed for tree clearing. Prior to beginning winter work, the Contractor shall submit details of the work to the Engineer for approval at least 30 days before work is to commence. Allowance of work outside the defined construction season does not relax or waive specifications or material requirements for workmanship or temperature of any item of work.

6. NOTICE TO BIDDERS – NIGHT WORK. The Contractor is hereby notified that night work will only be permitted during the Incentive/Disincentive periods. Night will be as defined in Subsection 101.02. The Engineer may abbreviate this time period as necessary. All work shall be completed in accordance with the requirements of Subsection 105.14(c) and Subsection 105.14(d).

7. NOTICE TO BIDDERS – ELECTRONIC DOCUMENT MANAGEMENT. The Contractor is hereby notified that the Contractor, their subcontractors, and suppliers shall create both a Doc Express and an iCXWeb account. The Contractor shall use these applications for collection and management of electronic documents. Doc Express can be accessed at the following link: https://docexpress.com. iCXWeb can be accessed at the following link: vtrans.exevision.com/icx/Index.aspx.

   All costs associated with the use of Doc Express and iCXWeb will be considered incidental to Item 635.1100, Mobilization/Demobilization. The State will manage the applications including Contract setup upon Contract execution.

   To create an account and for more information regarding the use of Doc Express see the information at the following link:

   https://outside.vermont.gov/agency/vtrans/external/docs/construction/Contracting/DocExpressOverviewforContractors.docx.

   To create an account and for more information regarding the use of iCXWeb see the information at the following link: https://vtrans.vermont.gov/icx.

8. NOTICE TO BIDDERS – ELECTRONIC TICKETING VTRANS PORTAL. The Contractor is hereby notified that the Contractor, their subcontractors, and suppliers shall connect to the VTrans Portal and use the application for distribution and management of electronic tickets (e-tickets). VTrans Portal is a state cloud-based e-ticket database, including a web-based user interface and a jobsite mobile e-ticket application. VTrans Portal will interface with the Contractor's supplier existing point of sales or e-ticketing platform and will allow VTrans to manage bituminous material e-tickets.

   All costs associated with the use of VTrans Portal will be considered incidental to the appropriate Section 406 and Section 407 pay items. The Agency will manage the VTrans Portal application including Contract setup upon Contract execution.

   To create an account, connect to the VTrans Portal, and for more information regarding the use of VTrans Portal see the information at the following link: https://www.haulhub.com/vermont-agency-transport-22/

9. NOTICE TO BIDDERS – CONTACT WITH THE AGENCY. From the time of advertising until the actual bid opening for this Contract, all prospective Contractors, subcontractors, and suppliers shall direct all inquiries related to this Contract solely to the Agency's Contract Administration Section at AOT.ConstructionContractingInquiry@vermont.gov.

   The deadline for submitting inquiries related to this Contract is 4:30 p.m. Eastern Time on November 4, 2026. Inquiries received prior to this time will receive a response from the Agency. Inquiries received after this time may receive a response at the Agency's discretion.

10. NOTICE TO BIDDERS – OTHER SPECIFICATIONS AND CONTRACT REQUIREMENTS.

    404 Corps of Engineers Permit – 23b758
    404 Corps of Engineers Permit – 23b755
    ANR RME Consultation – 23b758
    ANR RME Consultation – 23b755
    Impact Plans – 23b758
    Impact Plans – 23b755
    FHWA 1273 – Required Contract Provisions for Federal Aid Construction Contracts
    USDOL Davis Bacon Wage Rates by County
    Vermont Agency of Transportation Bidding Requirements and Conditions
    Disadvantaged Business Enterprise (DBE) Policy Contract Requirements - CR-110
    Attachment C - Standard State Provisions for Contracts and Grants
    USDOT Standard Title VI Nondiscrimination Assurances Appendices A, E
    Standard Federal Equal Employee Opportunity (EEO) Construction Contract Specifications CA26
    Contractor Equal Employment Opportunity (EEO) Certification Form – CA109
    Vermont Agency of Transportation Certificate of Compliance – CA271
    Vermont Agency of Transportation Minimum Labor and Truck Rates – CA101
    Commodity Index Prices – CA170
    Schedule of Pay Items

11. NOTICE TO BIDDERS – BIDDERS LIST FORM. The Contractor is hereby notified that the Agency is required by the U.S. Department of Transportation to develop and maintain a list of information about all firms that bid on federally funded Contracts in accordance with *49 C.F.R. § 26.11*. The Agency has developed a new electronic form to collect this information. The Contractor shall fill out this form as part of their project-specific prequalification for every Contract that they bid on. A link to this form is provided in the prequalification form available through iCX and the Agency's website.

12. NOTICE TO BIDDERS – DAVIS-BACON. U.S. Department of Labor Davis-Bacon wage rates are applicable to this Contract. Copies of the applicable rates are included in this proposal.

13. NOTICE TO BIDDERS – GENERAL SPECIAL PROVISIONS. The Contractor is hereby notified that the most recent General Special Provisions in effect on the date of advertisement shall apply to this Contract. The General Special Provisions may be found at the following address: https://vtrans.vermont.gov/highway/construct-material/construct-services/pre-contractspecifications/vermont/2024

14. NOTICE TO BIDDERS – STANDARD DRAWINGS. The Vermont Agency of Transportation Standard Drawings listed on the Index of Sheets are not included in the plan set, but may be found at the following address: https://resources.vtrans.vermont.gov/resources/cadd/VAOTconSTD_Name.xml?_gl=1*6cpy62*_ga*MTU5MTQ3NTcyNi4xNzIwMjM5NjI0*_ga_V9WQH77KLW*czE3NTI3NTYyMzQkbzE3NCRnMSR0MTc1Mjc1NjkwMyRqNjAkbDAkaDA.

15. NOTICE TO BIDDERS – INFORMATIONAL DOCUMENTS. The Contractor is hereby notified that the following informational documents for this Contract are available on iCXWeb and the VTrans Bid Opportunities website. These documents are being provided during the bid solicitation period for informational purposes only.

    (a) Traffic Management Plan (TMP) Checklist

    (b) Geotechnical Data Report – 23b758

    (c) Geophysics Investigation Memo – 23b758

    (d) Geotechnical Data Report – 23b755

    (e) Supplemental Subsurface Investigation – 23b755

    (f) Record Plans – 23b758

    (g) Record Plans – 23b755

16. NOTICE TO BIDDERS – SURFACE WATER WITHDRAWAL. The Contractor is hereby notified that the Vermont state law, Act 135 of 2022, requires any person withdrawing surface water (as defined in 10 V.S.A. § 1002 (20)) to register with and report the water withdrawal and usage to the Vermont Department of Environmental Conservation beginning January 1, 2023. Guidance can be found here: https://dec.vermont.gov/watershed/rivers/streamflow-protection/act-135-surface-water-withdrawal-registration-and-reporting

17. NOTICE TO BIDDERS – ENVIRONMENTAL COMMITMENTS.

    (a) Threatened, Endangered, and Rare Species.

(1) The Contractor shall ensure all personnel working on the project site are made aware of the potential presence and protected status of the northern long-eared bat. The Contractor shall ensure all personnel working on the project site are aware of all environmental commitments related to the northern long-eared bat. The clearing of trees ≥3 inches in diameter at breast height within the project limits shall be completed between October 1 and April 14, inclusive. The Contractor is hereby made aware of the potential for Time-of-Year (TOY) restrictions related to proposed Waste, Borrow and Staging areas. Cutting trees ≥3 inches in diameter outside of the contract project limits shall require review under Section 105.26 Opening Off-Site Activity Areas.

(b) Invasive Material.

(1) If invasive species are delineated on the Plans or found in the project area and confirmed by the Engineer, the invasive species, and any soil excavated from areas that contained the invasive species, will be termed invasive material.

The Contractor shall handle the invasive material in accordance with the *VTrans State Highway System Roadside Terrestrial Invasive Plants Best Management Practices (BMPs)*. The Contractor shall stockpile the invasive material separately from other soil stockpile areas. A ground barrier and perimeter containment system shall be in place around the area intended for stockpiling the invasive material. Equipment shall be cleaned of all soil and plant matter prior to arriving on site in accordance with Subsection 107.06. The equipment used for excavation and transport of invasive material shall be cleaned of all soil and plant matter before being used for work in other areas in accordance with the BMPs.

To the extent possible, invasive material shall be reused on site. Invasive material shall only be reused on site in areas where the presence of the invasive species were clearly evident. If there is an excess of invasive material, it shall be wasted in accordance with the BMPs.

The cost of excavating invasive material will be paid for under the appropriate Contract excavation items. When invasive species are delineated on the Plans, the additional cost for handling invasive material, following the BMPs, cleaning equipment, and wasting excess invasive material will be incidental to all other Contract items. When invasive species are not delineated on the Plans, and compensation is not otherwise provided for in the Contract, the work of handling invasive material, following the BMPs, cleaning equipment, and wasting excess invasive material will be considered extra work in accordance with Subsection 104.03 and will be paid for in accordance with Subsection 109.06.

18. NOTICE TO BIDDERS – UTILITIES. Existing aerial facilities owned by Comcast and Vermont Telephone Company will not require adjustment. The Contractor is cautioned to protect these facilities from damage.

Existing aerial facilities owned by Green Mountain Power will be adjusted, as necessary, by employees or agents of the above companies in accordance with the "Approximate Aerial Utility Relocation Route" shown in the Contract Plans.

Contacts for the above listed companies are as follows:

Utility Company	Contact Name	Contact Number
Comcast	Craig Kemp	603-494-9555
Green Mountain Power	Caleb Hawley	802-353-0172
Vermont Telephone Company	Judy Paton	802-289-2104

Employees or agents of the above listed companies are to be allowed free and full access within the project limits with the tools, materials, and equipment necessary to install, operate, maintain, place, replace, relocate, and remove their facilities.

There will be no extra compensation paid to the Contractor for any inconvenience caused by working around and with the companies, or their facilities. Should the Contractor desire additional adjustments of the utility facilities for his/her convenience, proper arrangements shall be made in conformance with Subsection 105.09.

There are areas of underground utilities that may require additional locating beyond normal dig safe measures The Contractor is hereby notified that exploratory excavation to locate existing underground facilities may be necessary to protect these facilities from damage. Where approved by the Engineer, these utilities shall be located and/or exposed by methods such as air/vacuum excavation and/or hand digging to determine their exact location. This exploratory work shall be classified as Trench Excavation of Earth, Exploratory and payment shall be through Pay Item "204.2200, Trench Excavation of Earth, Exploratory, (N.A.B.I)."

The Contractor shall notify aerial utility pole owner if excavation is within 10 feet of an existing pole. That pole owner may choose to be onsite for this activity. There will be no excavation allowed within 5 feet of existing poles and anchoring.

Vermont Statutes Annotated, Title 30, Chapter 86 ("Dig Safe") requires notice to Dig Safe before starting excavation activities. The Contractor must telephone Dig Safe at 811 at least 72 hours (excluding Saturdays, Sundays, and legal holidays) before, but not more than 30 days before, starting excavation activities at any location. In addition, before excavation and/or pavement grinding in or on the state highway right-of-way, the Contractor must contact the Agency's Traffic Signal Superintendent, Dan Ertel, to obtain/verify the location of Agency's underground utility facilities or to confirm the absence of such facilities. Dan can be reached at (802) 343-2188.

The Contractor is advised that many towns are not members of Dig Safe. It is the Contractor's responsibility to check with towns prior to excavation and shall protect and restore utilities damaged within the project and as set forth in Subsection 107.12.

All Contractors, subcontractors or material suppliers involved in any project-related activity shall comply with all applicable codes and regulations related to working around live electrical lines; including, but not limited to maintaining the required minimum clear distance from an electrical utility facility. The Contractor's Competent Safety Officer shall be well versed in OSHA and VOSHA regulations and shall be capable of implementing a plan to conform to these regulations during prosecution of work.

19. NOTICE TO BIDDERS – CONCURRENT CONSTRUCTION. The Contractor is made aware of the following VTrans construction project(s) which are expected to be in progress within the area of this project during its construction.

TABLE 1 – CONCURRENT CONSTRUCTION PROJECTS

Project	Contractor	Anticipated Contract Completion Date
STATEWIDE STPG SIGN(75)	TBD	June 2028
Bridgewater BM24401	TBD	November 2028
Plymouth ER P23-1(333)	TBD	October 2028
Bridgewater ER P23-1(424	TBD	October 2027

This list is not all-inclusive and it is possible there may be other VTrans, municipal, or private construction projects within the area of this project during its construction.

The Contractor shall coordinate construction schedules and traffic control with the work required for these projects.

There will be no extra compensation paid to the Contractor for any inconvenience caused by working around these or other projects.

20. NOTICE TO BIDDERS – SPECIAL CONSTRUCTION REQUIREMENTS.

(a) During construction, it will be necessary for the Contractor to maintain one-lane traffic for extended periods of time. In no case shall the paved width for this one-lane traffic, including shoulders, be reduced to less than 12 feet. This paved width shall remain free of obstructions and obstacles at all times.

(b) The Contractor shall position Portable Changeable Message Signs at locations determined by the Engineer properly warning motorists of the roadway conditions ahead. As directed by the Engineer, these locations may change during construction as needs arise based on daily work activities. The message to be displayed shall be submitted to the Engineer in advance for approval. The displayed message should accurately reflect what motorists can expect to encounter through the project area. The cost of providing the Portable Changeable Message Signs will be paid for under Contract item 641.1500 or 641.1700, as applicable. The Contractor shall also install and maintain appropriate construction signing warning the traveling public of the expected roadway surface conditions.

(c) Prior to final acceptance of the project, all drop inlets, bridge downspouts, and bridge joints within the project limits shall be cleaned and all material within the drop inlets and bridge joints shall be removed. All paved areas adjacent to curbs shall be swept and cleaned of all extraneous material. Costs for this work will not be paid for directly but will be considered incidental to all Contract items.

(d) There are special events throughout the year that may require close communication and coordination between the Contractor and the municipality to reduce conflicts. The municipality will advise the Engineer and Contractor of the specifics of each event and the Engineer will direct the Contractor as to what actions, if any, will be necessary on the Contractor's part to minimize impacts to the event. Special events that may conflict with Contractor operations are not limited to those which may be listed in this Notice to Bidders. There will be no extra compensation paid to the Contractor for any inconvenience caused by working around any listed or unlisted special events.

For more information about area special events, contact the following:

Plymouth: Angela Kissell
Town Clerk
Town of Plymouth
68 Town Office Rd, 05056
clerk@plymouthvt.org
802-500-1815

TABLE 1 – SCHEDULE OF KNOWN EVENTS

Event	Date
Plymouth Folk and Blues Festival	Late August 2026
Annual July 4th Calvin Coolidge Celebration	Early July Annually

21. NOTICE TO BIDDERS – SUBSECTION 101.02. Subsection 101.02 is hereby modified by revising the definition of "Contract" to add the phrase "General Special Provisions" immediately following the phrase "Standard Specifications".

22. NOTICE TO BIDDERS – SUBSECTION 726.08. Subsection 726.08(a) is hereby modified by being deleted in its entirety and replaced with the following:

    (a) Waterproofing Membrane System, Type I. Type I waterproofing membrane system shall be a Type I cold applied elastomeric system in accordance with *ASTM D6153*, except as modified below.

        (1) Permeability. The system shall have a maximum water vapor permeance of 1.0 perm, as determined in accordance with *ASTM E96*.

23. NOTICE TO BIDDERS – SUBSECTION 728.02. When material is supplied in accordance with Subsection 728.02(b) or Subsection 728.02(e), material in accordance with *AASHTO M 180-18* or *AASHTO M 180-23* may be substituted in place of material meeting *AASHTO M 180-25*.

VERMONT

State of Vermont
Highways- PDB Environmental Section
219 N. Main Street
Barre, VT 05641

Agency of Transportation

Memorandum

To: Project File Plymouth ER P23-1(327)

From: Sophia Seman, VTrans Biologist

Date: 11/13/2025

Subject: **US Corps of Engineers (USCOE) General Permit Self Verification Memo**

I have reviewed project Plymouth ER P23-1(327) for potential impacts to USCOE jurisdictional areas (wetlands and waterways). I have determined the project qualifies for Self-Verification (SV) under the **COE VT General Permit NAE-2022-00024**. All General Conditions (conditions 1-38 pages 27-38,) of the VTGP apply to this project and a copy of the permit will need to be included in the contract documents. Respective Contractors completing work authorized under this VTGP need to be familiar with all conditions of this permit. Please pay particular attention to conditions 19 & 20 as there are important in-stream time of year restrictions and culvert requirements under the SV process, as well as other special requirements. The VTGP is effective from December 6, 2022, through December 6, 2027.

If the Contractor proposes modified or additional project limits, the project may no longer qualify for coverage under the SV process. It is the Contractor's responsibility to seek coverage of any project changes under the SV process, VTGP, or with a USCOE Individual Permit. Please contact the USCOE at (802) 872-2893 for any questions.

Attached

COE VT GP NAE 2022-00024

USCOE VT Project Office Contact:

U.S. Army Corps of Engineers
New England District,
Vermont Project Office
11 Lincoln Street, Room 210
Essex Junction, Vermont 05452
(802) 872-2893, (802) 879-7638 fax
www.nae.usace.army.mil/missions/regulatory
cenae-r-vt@usace.army.mil

General Permit No.: NAE-2022-00024 Effective Date: December 6, 2022
Applicant: General Public in the State of Vermont Expiration Date: December 6, 2027

DEPARTMENT OF THE ARMY GENERAL PERMITS FOR THE STATE OF VERMONT

The New England District of the U.S. Army Corps of Engineers (USACE) hereby issues twenty-one (21) regional general permits (GPs) for activities subject to USACE jurisdiction in waters of the United States (WOTUS), including navigable waters, within the boundaries of the state of Vermont. These GPs are issued in accordance with USACE regulations at 33 CFR 320–332 (see 33 CFR 325.2(c)(1)). These GPs will provide protection to the aquatic environment and the public interest while effectively authorizing activities that have no more than minimal individual and cumulative adverse environmental effects.

This document contains the following sections:

		Page
SECTION I.	JURISDICTION/AUTHORITY TO ISSUE PERMITS	2
SECTION II.	REVIEW CATEGORIES AND APPLICATION PROCEDURES	2-4
SECTION III.	GENERAL PERMITS	4-26
SECTION IV.	GENERAL CONDITIONS	27-38
SECTION V.	CONTACTS	39
SECTION VI.	DEFINITIONS	40-44

In issuing these GPs, the Federal Government does not assume any liability for the following: (a) damages to the permitted project or uses thereof as a result of other permitted or unpermitted activities or from natural causes; (b) damages to the permitted project or uses thereof as a result of current or future activities undertaken by or on behalf of the U.S. in the public interest; (c) damages to persons, property or to other permitted or unpermitted activities or structures caused by the activity authorized by any of the GPs; (d) design or construction deficiencies associated with the permitted work; or (e) damage claims associated with any future modification, suspension or revocation of these permits.

Tammy R. Turley
Tammy R. Turley
Chief, Regulatory Division

December 6, 2022
Date

SECTION I. JURISDICTION/AUTHORITY TO ISSUE PERMITS

1. A Department of the Army Permit is required from USACE for the following regulated activities:

a. The construction of any structure in, over, or under any navigable water of the U.S. (see 33 CFR 328), the excavating or dredging from or depositing of material in such waters, or the accomplishment of any other work affecting the course, location, condition, or capacity of such waters. The USACE regulates these activities under Section 10 of the Rivers and Harbors Act of 1899 (see 33 CFR 322); and

b. The discharge of dredged or fill material and certain discharges associated with excavation into WOTUS including wetlands. The USACE regulates these activities under Section 404 of the Clean Water Act (see 33 CFR 323).

2. Related laws: 33 CFR 320.3 includes a list of related laws including, but not limited to, Section 14 of the Rivers and Harbors Act of 1899 (33 USC 408, "Section 408"), Section 401 of the Clean Water Act, Section 402 of the Clean Water Act, Section 307(c) of the Coastal Zone Management Act of 1972, Section 106 of the National Historic Preservation Act of 1966, Section 7 of the Endangered Species Act, the Fish and Wildlife Coordination Act of 1956, the Magnuson-Stevens Fishery Conservation and Management Act, Section 302 of the Marine Protection, Research and Sanctuaries Act of 1972, and Section 7(a) of the Wild and Scenic Rivers Act.

3. In order for an authorization under these GPs to be valid, a Water Quality Certification (WQC) under Section 401 of the CWA (33 USC 1341) or waiver thereof must be obtained from the Vermont Agency of Natural Resources (VT ANR), Watershed Management Division prior to the commencement of work in USACE jurisdiction. The VT ANR has granted an Individual WQC for all activities authorized under these GPs provided those activities meet the criteria as contained in these GPs and USACE notifies VT ANR of projects obtaining written verification under these GPs. The VT ANR will respond within the same response times required of the Federal resource agencies.

SECTION II. REVIEW CATEGORIES AND APPLICATION PROCEDURES

1. In order for activities to qualify for these GPs, they shall meet the terms and conditions of this document, including the eligibility criteria listed in Section III and the general conditions (GCs) listed in Section IV. The USACE will consider any activity requiring USACE authorization to be unauthorized if that activity is under construction or completed and does not comply with all of the terms and conditions of the GPs. The USACE will evaluate unauthorized activities for enforcement action under 33 CFR part 326. Any activity not specifically listed may still be eligible for authorization under these GPs; prospective permittees are advised to contact USACE for specific eligibility determinations.

2. Project proponents are encouraged to contact the USACE Vermont Project Office (VPO) with questions at any time (mailing address: 11 Lincoln Street, Room 210, Essex Junction, Vermont 05452; email: cenae-r-vt@usace.army.mil; phone: (802) 872-2893). Pre-application meetings (see 33 CFR 325.1(b)), whether arranged by USACE or requested by applicants, are encouraged to facilitate the review of projects. Pre-application meetings and/or site visits can help streamline the permit process by alerting the applicant to potentially time-consuming concerns that may arise during the evaluation

of a project (e.g., avoidance, minimization and compensatory mitigation requirements, historic properties, and endangered species).

3. Federal and state jurisdiction may differ in some instances. Applicants are responsible for applying for and obtaining all required federal, state or local approvals (see GC 1). A permit from USACE may be required for specific activities regardless of state of Vermont jurisdiction.

These GPs may also be used to authorize projects that are not regulated by the state of Vermont.

4. How to Obtain/Apply for Authorization:

Project proponents must read each GP and the GCs to see if an activity is eligible for authorization.

a. Self-Verification (SV):

May proceed without application or notification to USACE provided the project proponent verifies that the activity will meet the terms and conditions of applicable GPs. Project proponents shall comply with other federal laws such as the National Historic Preservation Act (NHPA), the Endangered Species Act (ESA) and the Wild and Scenic Rivers Act (WSRA). Consultation with outside experts, such as the State Historic Preservation Officer (SHPO), federally-recognized tribes in the state of Vermont (Tribal Historic Preservation Officers, or THPOs), National Park Service (NPS), and the U.S. Fish and Wildlife Service (USFWS) listed in Appendix V may also be necessary. The USACE relies on the VT ANR Environmental Notice Bulletin (ENB) for notification of SV projects, as applicable.

b. Pre-Construction Notification (PCN):

i. For activities that do not qualify for SV, the applicant must submit a PCN to obtain written verification from USACE before starting work in USACE jurisdiction. Digital submissions are encouraged and preferred and can be submitted directly to USACE staff by email, or at cenae-r-vt@usace.army.mil. Applicants must submit at least the following information:

- A completed USACE application form (ENG Form 4345[1]).
- Plans that illustrate the proposed work in reference to the limits of USACE jurisdiction as applicable. Plans should show existing and proposed conditions and contain all other appropriate information.
- Federal wetland delineation documentation (i.e., Wetland Determination Data Forms).
- Any information on federally listed endangered and threatened species and critical habitat that occur or may occur in the project area (See GC 12).
- Any correspondence with the SHPO and THPOs indicating coordination with these entities to ensure compliance with GC 11. Applicants are encouraged to submit a copy of their application materials to the SHPO and the THPOs, at the

[1] Located at www.nae.usace.army.mil/regulatory under "Useful Documents, Forms and Publications."

same time, or before, they apply to USACE to be reviewed for the presence of historic, archaeological or tribal resources in the permit area that the proposed work may affect.

The USACE will coordinate review of all PCN activities with the interagency review team (IRT) comprised of federal and state agencies and federally recognized tribes to ensure that the proposed activity results in no more than a minimal impact to the aquatic environment. This may require project modifications involving avoidance, minimization, and/or compensatory mitigation for unavoidable impacts to ensure the net effects of a project are minimal.

ii. Emergency Situations: Contact USACE immediately in the event of an emergency to obtain information on the verification process and coordination requirements. The USACE regulation at 33 CFR 325.2(e)(4) states that "an "emergency" is a situation which would result in an unacceptable hazard to life, a significant loss of property, or an immediate, unforeseen and significant economic hardship if corrective action requiring a permit is not undertaken within a time period less than the normal time needed to process the application under standard procedures." Emergency work is subject to the same terms and conditions of these GPs as non-emergency work, and similarly, must qualify for authorization under these GPs; otherwise, an individual permit (IP) shall be required. Upon notification, USACE will determine if a project qualifies for emergency procedures under the GPs and whether work may proceed prior to submittal of an application. Where an application is required, USACE staff will work with all applicable agencies to expedite verification according to established procedures in emergency situations.

5. Projects that are not authorized by these GPs require an IP (33 CFR 325.5(b)) and project proponents must submit an application directly to USACE. These GPs do not affect the USACE IP review process or activities exempt from USACE permit requirements. The USACE retains discretionary authority on a case-by-case basis to elevate an SV to PCN or an IP, or a PCN to an IP based on concerns for the aquatic environment or for any other factor of the public interest (33 CFR 320.4(a)). Whenever USACE notifies an applicant that a PCN or IP is required, no work in USACE jurisdiction may be conducted until USACE issues the required authorization in writing indicating that work may proceed. For IPs, an individual 401 WQC or waiver is required from the VT ANR. Contact the VT ANR for procedures on how to apply for a WQC.

SECTION III. GENERAL PERMITS

An activity listed below may be authorized by these GPs only if that activity and the permittee satisfy all of the GP's terms and conditions. Any activity not specifically listed below may still be eligible for the GPs; prospective permittees are advised to contact USACE for specific eligibility determinations.

"Permanent impacts" means WOTUS that are permanently affected by filling, flooding, excavation, drainage or clearing because of the regulated activity. Permanent impacts include permanent discharges of dredged or fill material that change an aquatic area to dry land, increase the bottom elevation of a waterbody, or change the use of a waterbody. Temporary impacts include, but are not limited to, WOTUS that are temporarily filled, flooded, excavated, drained or cleared because of the regulated activity. Temporary

impacts are usually associated with construction activities and often involve the placement of cofferdams and construction mats. These fills are removed when construction is completed. Pilings and associated structures do not ordinarily constitute a discharge of fill material. Impacts resulting from activities eligible for exemptions under §404(f) of the CWA are not considered when calculating the impact area.

Vermont General Permits

1. Aids to navigation
2. Repair or maintenance of existing currently serviceable, authorized or grandfathered structures/fills and removal of structures and fills
3. Moorings
4. Pile-supported structures and floats, including boat lifts/hoists and other miscellaneous structures, temporary recreational structures and work
5. Boat ramps and marine railways
6. Utility line activities
7. Dredging, beach nourishment, rock and debris removal and rock relocation
8. U.S. Coast Guard Approved Bridges
9. Shoreline and bank stabilization projects
10. Aquatic habitat restoration, establishment and enhancement activities
11. Fish and wildlife harvesting activities
12. Oil spill and hazardous material cleanup
13. Cleanup of hazardous and toxic waste
14. Scientific measurement devices
15. Survey activities
16. Energy generation and renewable energy generation facilities and hydropower projects
17. New/expanded developments and recreational facilities
18. Linear transportation projects and stream/wetland crossings
19. Mining activities
20. Temporary fill not associated with any other GP activities
21. Agricultural activities

GP 1. AIDS TO NAVIGATION (Section 10): The placement of aids to navigation and regulatory markers that are approved by and installed in accordance with the requirements of the U.S. Coast Guard (USCG). See 33 CFR 66, Chapter I, subchapter C.	
Self-Verification Eligible	**Pre-Construction Notification Required**
Aids to navigation and regulatory markers approved by and installed in accordance with the requirements of the USCG. Not located within a USACE Federal Navigation Project (FNP).	1. Work not eligible for SV. 2. Aids to navigation and regulatory markers or temporary buoys, markers, floats, and similar structures that are located within a USACE FNP.

GP 2. REPAIR OR MAINTENANCE OF EXISTING CURRENTLY SERVICEABLE, AUTHORIZED OR GRANDFATHERED STRUCTURES/FILLS AND REMOVAL OF STRUCTURES AND FILLS (Sections 10 & 404): (a) Repair, rehabilitation, or replacement of any previously authorized, currently serviceable structure or fill, or of any currently serviceable structure or fill authorized by 33 CFR 330.3 (activities occurring before certain dates), provided that the structure or fill is not to be put to uses differing from those uses specified or contemplated for it in the original permit or the most recently authorized modification. Minor deviations in the structure's configuration or filled area, including those due to changes in materials, construction techniques, requirements of other regulatory agencies, or current construction codes or safety standards that are necessary to make the repair, rehabilitation, or replacement are authorized. Includes removal of structures and fill. **Not authorized under GP 2:** Permanent impacts > 5,000 SF in Lake Champlain, Lake Memphremagog, Wallace Pond and adjacent wetlands, and > 1 acre in all other WOTUS.	
Self-Verification Eligible	**Pre-Construction Notification Required**
1. Repair, replacement in-kind, or maintenance of existing, currently serviceable, authorized structures or fills with no substantial expansion or change in use: - Conditions of the original authorization apply. - Minor deviations in fill design allowed. - The repair, rehabilitation, or replacement of those structures or fills destroyed or damaged by storms, floods, fire or other discrete events is authorized, provided the repair, rehabilitation, or replacement is commenced, or is under contract to commence, within two years of the date of their destruction or damage. In cases of catastrophic events, such as hurricanes or tornadoes, USACE may waive the two-year limit in writing provided the permittee can demonstrate funding, contract, or other similar delays. - Maintenance includes, but it is not limited to, the removal of accumulated sediments and debris in the vicinity of existing structures (such as bridges, culverted road crossings, water intake structures, dams, etc.), provided: (a) removal is the minimum necessary to restore the waterway in the vicinity of the structure to the approximate dimensions that existed when the structure was built; and (b) all dredged or excavated materials are deposited and retained in an upland area. 2. Bulkhead replacement via installation of new bulkhead within 18” of existing bulkhead and backfill. 3. Construction mats of any area necessary to conduct activities that were previously authorized, authorized under SV, or not subject to regulation in all WOTUS. 4. Removal of previously authorized structures or fills and the restoration to pre-construction conditions.	1. Work not eligible for SV. 2. Dam and flood control or levee repair, rehabilitation, or replacement which involves a permanent change in the flood elevation or permanent water surface elevation of the impoundment. 3. The discharge of more than *de minimis* (i.e., inconsequential) quantities of accumulated bottom sediment occurring from or through a dam into downstream waters. **NOTE 1**: Grandfather dates include structures or work completed before December 18, 1968 and fill placed before July 25, 1975 for USACE purposes only. **NOTE 2**: This GP authorizes the repair, rehabilitation, or replacement of any previously authorized structure or fill that does not qualify for the CWA §404(f) exemption for maintenance. See 33 CFR 323.4(a)(2).

GP 3. MOORINGS (Section 10): (a) New private, non-commercial, non-rental, single-boat moorings; (b) Minor relocation of previously authorized moorings; (c) Mooring field expansions, boundary reconfigurations, or modifications of previously authorized mooring fields; and (d) Maintenance and replacement of moorings. **Not authorized under GP 3:** Moorings or moored vessels that extend within the horizontal limits of FNPs and moorings associated with a new boating facility.	
Self-Verification Eligible	**Pre-Construction Notification Required**
1. Private, non-commercial, non-rental, single-boat moorings. 2. Minor relocation of previously authorized moorings.	1. Work not eligible for SV. 2. New moorings associated with an existing boating facility.

GP 4. PILE-SUPPORTED STRUCTURES AND FLOATS, INCLUDING BOAT LIFTS/HOISTS AND OTHER MISCELLANEOUS STRUCTURES, TEMPORARY RECREATIONAL STRUCTURES AND WORK (Section 10): (a) New, expansions, reconfigurations, or modifications of structures for navigation access including docks, decks, floats, stairs, and boat/float lifts; and (b) Temporary buoys, markers, and similar structures placed for recreational use during specific events such as water skiing competitions and boat races or seasonal use. **Not authorized under GP 4:** (a) Fill or excavation; (b) Structures within FNPs; or (c) Structures associated with a new boating facility.	
Self-Verification Eligible	**Pre-Construction Notification Required**
1. Reconfiguration of existing authorized docks with no additional slips and no expansion, provided those structures do not extend beyond the existing perimeter of the facility. 2. Seasonal private, residential pile-supported or float-supported structures for navigational access extending no further waterward than 50 feet beyond mean high water (MHW), not >6 feet wide, and a cumulative dock deck area <500 SF, and not located within 25 feet of the property line. 3. Private, bottom-anchored seasonal swim floats that are <400 SF in size. 4. Private boat and float lifts. 5. Temporary buoys, markers, and similar structures: (a) placed for recreational use during specific events, provided that such structures are removed within 30 days after use has been discontinued and/or; (b) placed during winter events on ice and removed before spring thaw. Provided the above do not extend across >25% of the waterway width at mean low water (MLW).	1. Work not eligible for SV. 2. Piers, docks, decks, floats, and similar structures that provide public, community or government recreational uses such as boating, fishing, swimming, access, etc. 3. Structures or work in or affecting navigable WOTUS that are not defined under any other GP activity. 4. New structures within an existing boating facility, provided those structures do not extend beyond the existing perimeter of the boating facility. 5. Temporary buoys, markers, and similar structures that will not be removed within 30 days after use has been discontinued. 6. Cordoning off portions of public waters (e.g., swim areas). **NOTE:** The USACE may require a letter of no objection from the abutter if a structure is to be located within 25 feet of the property line.

GP 5. BOAT RAMPS AND MARINE RAILWAYS (Sections 10 and 404): Activities required for the construction of boat ramps and marine railways including excavation and fill. **Not authorized under GP 5:** (a) Permanent impacts ≥ 5,000 SF in Lake Champlain, Lake Memphremagog and Wallace Pond and adjacent wetlands, and > 1 acre in all other WOTUS; (b) Temporary impacts > 1 acre in WOTUS; or (c) dredging in navigable WOTUS. (see GP 7).	
Self-Verification Eligible	**Pre-Construction Notification Required**
1. < 5,000 SF of permanent and temporary impacts in waterways and/or wetlands other than Lake Champlain, Lake Memphremagog, Wallace Pond and adjacent wetlands.	1. Work not eligible for SV. 2. < 5000 SF permanent impact and < 1 acre of temporary impact and excavation in Lake Champlain, Lake Memphremagog and Wallace Pond and adjacent wetlands. 3. Permanent and temporary impacts ≥ 5,000 SF and < 1 acre in waterways and/or wetlands, other than Lake Champlain, Lake Memphremagog, Wallace Pond and adjacent wetlands. **NOTE**: The USACE may require a letter of no objection from the abutter if a structure is to be located within 25 feet of the property line.

<table>
<tr><td colspan="2">GP 6. UTILITY LINE ACTIVITIES (Sections 10 & 404): Activities required for (a) The construction, maintenance, relocation, repair, and removal of utility lines, including outfall and intake structures, and the associated excavation, backfill, or bedding for utility lines; (b) The construction, maintenance or expansion of utility line substation facilities associated with a power/utility line in WOTUS; and (c) The construction and maintenance of foundations for overhead utility line towers, poles, and anchors, provided the foundations are the minimum size necessary, and separate footings for each tower leg (rather than a larger single pad) are used where feasible. This GP authorizes the construction of access roads to facilitate construction of the above activities, provided the activity, in combination with all other activities included in one single and complete project, does not cause the permanent loss of greater than 1 acre of WOTUS. Impacts resulting from mechanized pushing, dragging or other similar activities that redeposit excavated soil material shall be figured into the area limit determination.

Not authorized under GP 6: Permanent and temporary impacts ≥ 5,000 SF in Lake Champlain, Lake Memphremagog, Wallace Pond and adjacent wetlands, and > 1 acre in all other WOTUS.</td></tr>
<tr><th>Self-Verification Eligible</th><th>Pre-Construction Notification Required</th></tr>
<tr><td>1. < 5,000 SF of permanent and temporary impacts in waterways and/or wetlands other than Lake Champlain, Lake Memphremagog, Wallace Pond and adjacent wetlands.

2. Intake structures that are dry hydrants used exclusively for firefighting activities with no stream impoundments.

3. Seasonal waterlines installed on the lake or river bottom that are ≤ 2 inches in diameter.</td><td>1. Work not eligible for SV.

2. Overhead utility lines constructed over navigable WOTUS and submarine utility lines that are routed in or under such waters.

3. Permanent and temporary impacts are:
a. < 5,000 SF in Lake Champlain, Lake Memphremagog, Wallace Pond and adjacent wetlands.
b. ≥ 5,000 SF and < 1 acre in waterways and/or wetlands other than Lake Champlain, Lake Memphremagog, Wallace Pond and adjacent wetlands.

4. Work involves stream channelization, relocation or loss of streambed including impoundments.

NOTE: Utility lines consisting of aerial electric power transmission lines crossing navigable WOTUS must comply with the applicable minimum clearances specified in 33 CFR 322.5(i).</td></tr>
<tr><td colspan="2">NOTE: A utility line is defined as any pipe or pipeline for the transportation of any gaseous, liquid, liquescent, or slurry substance, for any purpose, and any cable, line, or wire for the transmission for any purpose of electrical energy, telephone, data, and telegraph messages, and radio and television communication. The term utility line does not include activities that drain a water of the U.S., such as drainage tile or French drains, but it does apply to pipes conveying drainage from another area.
NOTE: Construction mats of any area necessary to conduct activities do not count towards the SV and PCN thresholds and should be removed as soon as work is completed.</td></tr>
</table>

GP 7. DREDGING (Section 10), BEACH NOURISHMENT, (Sections 10 & 404); ROCK AND DEBRIS REMOVAL (Section 10) AND ROCK RELOCATION (Sections 10 & 404): (a) New and maintenance dredging, including disposal of dredged material for beach nourishment, provided USACE finds the dredged material to be suitable for such disposal; (b) Beach nourishment not associated with dredging; and (c) Rock removal and relocation for navigation. **Not authorized under GP 7:** (a) New and maintenance dredging ≥ 5,000 CY; (b) Permanent fill ≥ 5,000 SF in Lake Champlain, Lake Memphremagog, Wallace Pond and adjacent wetlands, and > 1 acre in all other WOTUS; (c) Regulated discharges associated with excavation, and disposal > 1/2 acre; and (d) Temporary fill > 1 acre in all WOTUS.	
Self-Verification Eligible	**Pre-Construction Notification Required**
1. No new or maintenance dredging in navigable WOTUS. 2. < 5,000 SF of temporary impact associated with dredging in waterways and/or wetlands. 3. ≤ 200 SF of impact associated with rock removal and relocation. 4. Removal of debris (e.g. woody and plant material deposited after a storm event) in navigable WOTUS.	1. Work not eligible for SV. 2. New and maintenance dredging up to 5,000 CY with upland disposal or beach nourishment in navigable WOTUS. 3. ≥ 5,000 SF and < 1 acre of temporary impact associated with dredging in all waterways and/or wetlands. 4. Disposal of dredged material for beach nourishment: a. < 5,000 SF in Lake Champlain, Lake Memphremagog, Wallace Pond and adjacent wetlands. b. ≥ 5,000 SF and < 1 acre in waterways and/or wetlands other than Lake Champlain, Lake Memphremagog, Wallace Pond and adjacent wetlands.

GP 8. U.S. COAST GUARD APPROVED BRIDGES (Section 10 & 404; navigable WOTUS): Discharges of dredged or fill material incidental to the construction and modification of bridges across navigable WOTUS, including cofferdams, abutments, foundation seals, piers, and temporary construction and access fills provided that the USCG authorizes the construction of the bridge structure under Section 9 of the Rivers and Harbors Act of 1899 or other applicable laws. A USCG Authorization Act Exemption or a STURRA (144h) exemption do not constitute USCG authorization (see GP 18). **Not authorized under GP 8:** Causeways and approach fills (see GP 18)	
Self-Verification Eligible	**Pre-Construction Notification Required**
Discharges of dredged or fill material incidental to the construction and modification of bridges.	

GP 9. SHORELINE AND BANK STABILIZATION PROJECTS (Sections 10 & 404): Bank stabilization activities necessary for erosion protection along the banks of lakes, ponds, streams, and any other open waters. Includes bulkheads, seawalls, riprap, revetments or slope protection and similar structures, as well as vegetative planting, soil bioengineering, or alternative techniques that are a combination of the two (e.g. living shorelines), specifically for the purpose of shoreline protection. **Not authorized under GP 9:** (a) Bank stabilization ≥ 500 LF in total length and/or involving more than an average of 1 CY of fill per linear foot placed below the plane of the ordinary high water mark (OHWM) in Lake Champlain, Lake Memphremagog and Wallace Pond and adjacent wetlands; (b) Stream channelization or relocation activities; or (c) breakwaters, groins and jetties.	
Self-Verification Eligible	**Pre-Construction Notification Required**
1. No fill in Lake Champlain, Lake Memphremagog, Wallace Pond and adjacent wetlands. 2. Bank stabilization < 200 linear feet long and does not exceed an average of 1 CY of fill per linear foot placed below the plane of OHWM in WOTUS other than Lake Champlain, Lake Memphremagog, Wallace Pond and adjacent wetlands. 3. < 5,000 SF of temporary fill associated with bank stabilization in waterways and/or wetlands, other than Lake Champlain, Lake Memphremagog, Wallace Pond and adjacent wetlands.	1. Work not eligible for SV. 2. Bank stabilization <500 linear feet and an average of < 1 CY of fill per linear foot placed below the plane of OHWM in Lake Champlain, Lake Memphremagog, Wallace Pond and adjacent wetlands.

GP 10. AQUATIC HABITAT RESTORATION, ESTABLISHMENT AND ENHANCEMENT ACTIVITIES (Sections 10 and 404): Activities in waters of the United States associated with the restoration, enhancement, and establishment of wetlands and riparian areas; the restoration and enhancement of streams and other open waters; the relocation of non-navigable WOTUS, including streams and associated wetlands for reestablishment of a natural stream morphology and reconnection of the floodplain; and the restoration and enhancement of shellfish, finfish and wildlife, provided those activities result in net increases in aquatic resource functions and services. **Not authorized under GP 10:** Stream channelization activities.	
Self-Verification Eligible	**Pre-Construction Notification Required**
1. No fill in Lake Champlain, Lake Memphremagog, Wallace Pond and adjacent wetlands. 2. Permanent and temporary impacts are < 5,000 SF in waterways and/or wetlands. 3. The activity does not convert a stream to wetland or vice versa, or wetland to a pond or uplands. 4. Temporary structures in navigable WOTUS not exceeding 30 days.	1. Work not eligible for SV. 2. Permanent or temporary impacts are: a. In Lake Champlain, Lake Memphremagog, Wallace Pond, adjacent wetlands; or b. ≥ 5,000 SF in all other waterways and/or wetlands. 3. Permanent structures in navigable WOTUS. 4. Sea Lamprey control projects. 5. Water impoundments. 6. Dam removals. 7. Restoration, establishment and/or enhancement activities approved for use by a USACE-approved in-lieu fee program or USACE-approved mitigation bank, with impacts of any size.

GP 11. FISH AND WILDLIFE HARVESTING ACTIVITIES (Sections 10 and 404): Activities in waters of the United States associated with fish and wildlife harvesting devices, such as duck blinds, fish shanties, and small fish aggregating and attraction devices. **Not authorized by GP 11:** (a) Artificial reefs; and (b) Permanent and temporary fill > 5,000 SF in all waterways and/or wetlands.	
Self-Verification Eligible	**Pre-Construction Notification Required**
Non-fill activities associated with fish and wildlife harvesting devices including duck blinds, fish shanties and small fish aggregating and attraction devices in navigable waters.	1. Work not eligible for SV. 2. Permanent and temporary impacts < 5,000 SF in all waterways and/or wetlands.

GP 12. OIL SPILL AND HAZARDOUS MATERIAL CLEANUP (Sections 10 and 404): (a) Activities conducted in response to a discharge or release of oil and hazardous substances that are subject to the National Oil and Hazardous Substances Pollution Contingency Plan (40 CFR 300) including containment, cleanup, and mitigation efforts, provided activities are done under either (i) The Spill Prevent, Control and Countermeasure Plan required by 40 CFR 112.3; (ii) The direction or oversight of the Federal on-site coordinator designated by 40 CFR 300; or (iii) Any approved existing state, regional or local contingency plan, provided that the Regional Response Team concurs with the proposed response efforts or does not object to the response effort; (b) Activities required for the cleanup of oil releases in WOTUS from electrical equipment that are governed by EPA's polychlorinated biphenyl (PCB) spill response regulations at 40 CFR 761; (c) Booms placed in navigable WOTUS; and (d) Use of structures and fills for spill response training exercises. Special Aquatic Sites (SAS) must be restored to their original condition and elevation	
Self-Verification Eligible	**Pre-Construction Notification Required**
1. Activities that are conducted in accordance with (a) or (b) above. 2. Booms placed in navigable WOTUS for hazardous and toxic waste containment, absorption and prevention, provided they are removed upon completion of the cleanup. 3. Temporary impacts for spill response training exercises < 1000 SF in navigable WOTUS and < 5000 SF in all other WOTUS, and in place ≤ 30 days.	1. Work not eligible for SV. 2. Permanent structures or impacts for spill response training exercises.

GP 13. CLEANUP OF HAZARDOUS AND TOXIC WASTE (Sections 10 and 404): Specific activities to effect the containment, stabilization or removal of hazardous or toxic waste materials, including court ordered remedial action plans or related settlements which are performed, ordered or sponsored by a government agency with established legal or regulatory authority. SAS must be restored to their original condition and elevation. **Not authorized under GP 13:** (a) the establishment of new disposal sites; or (b) the expansion of existing sites used for the disposal of hazardous or toxic waste.	
Self-Verification (SV) Eligible	**Pre-Construction Notification Required**
1. Permanent and temporary impacts are < 5,000 SF in WOTUS. 2. No fill in navigable WOTUS. 3. Booms placed in navigable WOTUS for oil and hazardous substance containment, absorption and prevention, provided they are removed upon completion of the cleanup.	1. Work not eligible for SV. 2. Permanent and temporary impacts: a. ≥ 5,000 SF in all WOTUS; or b. Located in navigable WOTUS. 3. Work involves stream channelization, relocation, impoundments or loss of streambed.

GP 14. SCIENTIFIC MEASUREMENT DEVICES (Sections 10 and 404): Scientific devices for measuring and recording scientific data, such as staff gauges, tide and current gauges, meteorological stations, water recording and biological observation devices, water quality testing and improvement devices, and similar structures. Also eligible are small temporary weirs and flumes constructed primarily to record water quantity and velocity, provided the discharge is < 25 CY. **Not authorized under GP 14:** (a) Permanent and temporary impacts > 1/2 acre in navigable WOTUS; and (b) Permanent and temporary impacts > 1 acre in all other WOTUS.	
Self-Verification Eligible	**Pre-Construction Notification Required**
1. Permanent and temporary impacts are ≤ 1,000 SF in WOTUS. 2. Temporary structures in navigable WOTUS. Provided the activity does not: • Restrict or concentrate movement of aquatic organisms; • Result in a hazard to navigation.	1. Work not eligible for SV. 2. Permanent and temporary impacts > 1000 SF in WOTUS. 3. Permanent structures in navigable WOTUS. 4. The activity involves permanent biological sampling devices in non-navigable WOTUS, temporary or permanent biological sampling devices in navigable WOTUS, or weirs and flumes.
NOTE: Upon completion of the use of the device to measure and record scientific data, the measuring device, and any other structures or fills associated with that device (e.g., foundations, anchors, buoys, lines, etc.), must be removed to the maximum extent practicable.	

GP 15. SURVEY ACTIVITIES (Sections 10 and 404): Survey activities such as soil borings, core sampling, seismic exploratory operations, plugging of seismic shot holes, and other exploratory-type bore holes, exploratory trenching and historic resources surveys. **Not authorized under GP 15:** (a) Permanent impacts > 5,000 SF in Lake Champlain, Lake Memphremagog and Wallace Pond, and > 1 acre in all other waterways and/or wetlands, (b) Temporary impacts > 1 acre in all WOTUS, excluding temporary mats.	
Self-Verification Eligible	**Pre-Construction Notification Required**
1. No fill in Lake Champlain, Lake Memphremagog and Wallace Pond. 2. < 5,000 SF of permanent and temporary impacts in waterways and/or wetlands other than Lake Champlain, Lake Memphremagog and Wallace Pond. 3. No impacts, other than soil borings or core sampling, in navigable WOTUS. 4. No permanent structures or drilling and discharge of excavated material from test wells for oil and gas exploration allowed.	1. Work not eligible for SV. 2. < 5000 SF permanent impact and < 1 acre of temporary impact in Lake Champlain, Lake Memphremagog and Wallace Pond and adjacent wetlands. 3. Permanent and temporary impacts are ≥ 5,000 SF and < 1 acre of impact in waterways and/or wetlands, other than Lake Champlain, Lake Memphremagog, Wallace Pond and adjacent wetlands.
NOTE: The area in which the exploratory trench is dug must be restored to its preconstruction elevation upon completion of the work and must not drain a water of the United States. In wetlands, the top 6 to 12 inches of the trench should normally be backfilled with topsoil from the trench. **NOTE**: Construction mats of any area necessary to conduct activities do not count towards the SV and PCN thresholds and should be removed as soon as work is completed.	

GP 16. ENERGY GENERATION AND RENEWABLE ENERGY GENERATION FACILITIES AND HYDROPOWER PROJECTS (Sections 10 and 404): Structures and work in navigable WOTUS and discharges of dredged or fill material into WOTUS for the construction, expansion, modification or removal of: (a) land-based renewable energy production facilities, including attendant features; (b) water-based wind production facilities or hydrokinetic renewable energy generation projects and their attendant features; and (c) discharges of dredged or fill material associated with hydropower projects.

Attendant features may include, but are not limited to, land-based collection and distribution facilities, control facilities, and parking lots. For each single and complete project in (b) above, no more than 10 generation units (e.g., wind turbines or hydrokinetic devices) are authorized in navigable WOTUS.

Not authorized under GP 16: Permanent and temporary impacts that are (a) > 1 acre in non-navigable WOTUS; (b) > 5,000 SF in navigable WOTUS; and (c) > 5,000 SF in wetlands adjacent to Lake Champlain, Lake Memphremagog, and Wallace Pond.

Self-Verification Eligible	**Pre-Construction Notification Required**
For land-based facilities: 1. < 5,000 SF of permanent and temporary impacts in non-navigable WOTUS.	1. Work not eligible for SV. 2. Permanent and temporary impacts are: a. ≥ 5000 SF and < 1 acre in non-navigable WOTUS, and b. < 5000 SF in navigable WOTUS. 3. Work involves stream channelization, relocation or loss of streambed including impoundments.

NOTE: Utility lines constructed to transfer the energy from the land-based renewable generation or collection facility to a distribution system, regional grid, or other facility may be authorized by GP 6.
NOTE: Construction mats of any area necessary to conduct activities do not count towards the SV and PCN thresholds and should be removed as soon as work is completed.

GP 17. NEW/EXPANDED DEVELOPMENT AND RECREATIONAL FACILITIES (Sections 10 and 404): Discharges of dredged or fill material for the construction or expansion of developments and/or recreational facilities. This GP authorizes attendant features that are necessary for the use of the development. Attendant features may include but are not limited to roads, parking lots, garages, yards, utility lines, storm water management facilities, and septic fields. Fill area includes all temporary and permanent fill, and regulated discharges associated with excavation. **Not authorized under GP 17:** Permanent and temporary impacts > 5,000 SF in Lake Champlain, Lake Memphremagog, Wallace Pond and adjacent wetlands, and > 1 acre in all other waterways and/or wetlands.	
Self-Verification Eligible	**Pre-Construction Notification Required**
1. < 5,000 SF of permanent and temporary impacts in waterways and/or wetlands other than Lake Champlain, Lake Memphremagog and Wallace Pond and adjacent wetlands.	1. Work not eligible for SV. 2. Permanent and temporary impacts are: a. < 5,000 SF in Lake Champlain, Lake Memphremagog, Wallace Pond and adjacent wetlands. b. ≥ 5,000 SF and < 1 acre in waterways and/or wetlands other than Lake Champlain, Lake Memphremagog, Wallace Pond and adjacent wetlands. 3. Work involves stream channelization, relocation, or loss of streambed, including impoundments.
NOTE: Construction mats of any area necessary to conduct activities do not count towards the SV and PCN thresholds and should be removed as soon as work is completed.	

<table>
<tr><td colspan="2">GP 18. LINEAR TRANSPORTATION PROJECTS AND STREAM/WETLAND CROSSINGS (Sections 10 & 404): Activities required for the construction, expansion, modification, or improvement of linear transportation projects (e.g., driveways, roads, highways, railways, trails, airport runways, and taxiways), and attendant features. Any stream channel modification is limited to the minimum necessary to construct or protect the linear transportation project; such modifications must be in the immediate vicinity of the project.

Not authorized under GP 18: Permanent and temporary impacts > 5,000 SF in Lake Champlain, Lake Memphremagog, Wallace Pond and adjacent wetlands, and > 1 acre in all other waterways and/or wetlands.</td></tr>
<tr><th>Self-Verification Eligible</th><th>Pre-Construction Notification Required</th></tr>
<tr><td>1. < 5,000 SF of permanent and temporary impacts in waterways and/or wetlands other than Lake Champlain, Lake Memphremagog and Wallace Pond and adjacent wetlands.

2. Permanent and temporary stream crossings that comply with GC 20.

3. Existing crossings (e.g., culverts, elliptical or arch pipes, etc.) are not modified by (a) decreasing the diameter of the crossing or (b) changing the friction coefficient, such as through sliplining (retrofitting an existing culvert by inserting a smaller diameter pipe), culvert relining or invert lining.</td><td>1. Work not eligible for SV.

2. Permanent and temporary impacts are:
a. < 5,000 SF in Lake Champlain, Lake Memphremagog, Wallace Pond and adjacent wetlands.

b. ≥ 5,000 SF and < 1 acre in waterways and/or wetlands other than Lake Champlain, Lake Memphremagog, Wallace Pond and adjacent wetlands.

3. Work involves stream channelization, relocation or loss of streambed including impoundments.

NOTE: Time of year for instream work is not limited for PCN authorizations unless specifically required by special conditions.</td></tr>
<tr><td colspan="2">NOTE: Non-linear features commonly associated with transportation projects, such as vehicle maintenance or storage buildings, parking lots, train stations, or aircraft hangars may be authorized by GP 17.
NOTE: Construction mats of any area necessary to conduct activities do not count towards the SV and PCN thresholds and should be removed as soon as work is completed.</td></tr>
</table>

GP 19. MINING ACTIVITIES (Sections 10 and 404): Discharges of dredged or fill material into WOTUS for mining activities. **Not authorized under GP 16:** Permanent and temporary impacts > 5,000 SF in Lake Champlain, Lake Memphremagog, Wallace Pond and adjacent wetlands, and > 1 acre in all other waterways and/or wetlands.	
Self-Verification Eligible	**Pre-Construction Notification Required**
1. The activity does not occur in, over, or under navigable WOTUS. 2. < 5,000 SF of permanent and temporary impacts in waterways and/or wetlands other than Lake Champlain, Lake Memphremagog, Wallace Pond and adjacent wetlands.	1. Work not eligible for SV. 2. Permanent and temporary impacts are: a. < 5,000 SF in Lake Champlain, Lake Memphremagog, Wallace Pond and adjacent wetlands. b. ≥ 5,000 SF and < 1 acre in waterways and/or wetlands other than Lake Champlain, Lake Memphremagog, Wallace Pond and adjacent wetlands. 3. Work occurs in a navigable WOTUS. 4. Work involves stream channelization, relocation, impoundment, loss of streambed, or discharge of tailings into streams.

GP 20. TEMPORARY FILL NOT ASSOCIATED WITH ANY OTHER GP ACTIVITIES (Sections 10 and 404): Temporary structures, work, and discharges, including cofferdams, necessary for construction activities or access fills or dewatering of construction sites that are not authorized under another GP activity. **Not authorized under GP 20:** (a) Permanent structures or impacts; (b) Temporary impacts > 1 acre in WOTUS; (c) use of cofferdams to dewater wetlands or other aquatic areas to change their use; or (d) Structures or fill left in place after construction is completed.	
Self-Verification Eligible	**Pre-Construction Notification Required**
1. Temporary impacts including land clearing in WOTUS are ≤ 5000 SF.	1. Work not eligible for SV.
NOTE: Temporary stream crossings may be authorized under GP 18. **NOTE**: Construction mats of any area necessary to conduct activities do not count towards the SV and PCN thresholds and should be removed as soon as work is completed.	

GP 21. AGRICULTURAL ACTIVITIES (Section 404): Discharges of dredged or fill material into WOTUS for agricultural activities, including the construction of building pads for farm buildings. Authorized activities include: (a) installation, placement, or construction of drainage tiles, ditches, or levees; mechanized land clearing; land leveling; the relocation of existing serviceable drainage ditches; and similar activities; (b) discharges of dredged or fill material to relocate existing serviceable drainage ditches constructed in streams. **Not authorized under GP 21:** (a) Permanent impacts > 1 acre in non-navigable WOTUS; (b) Work in navigable WOTUS; or (c) Construction of farm ponds in perennial streams.	
Self-Verification Eligible	**Pre-Construction Notification Required**
1. For those activities subject to USACE jurisdiction, < 5,000 SF of permanent and temporary impacts.	1. ≥ 5,000 SF to < 1 acre of permanent and temporary impacts. 2. Work involves stream channelization, relocation or loss of streambed including impoundments.

SECTION IV. GENERAL CONDITIONS

1. Other Permits. Permittees shall obtain other federal, state, or local authorizations as required by law. Permittees are responsible for applying for and obtaining all required state or local approvals. Work that is not regulated by the state of Vermont, but is subject to USACE jurisdiction, may be eligible for these General Permits (GPs).

2. Federal Jurisdictional Boundaries.

a. Applicability of these GPs shall be evaluated with reference to federal jurisdictional boundaries. Activities shall be evaluated with reference to "WOTUS" under the Clean Water Act (33 CFR 328) and "navigable WOTUS" under §10 of the Rivers and Harbors Act of 1899 (33 CFR 329). Applicants are responsible for ensuring that the boundaries used satisfy the federal criteria defined at 33 CFR 328-329. These sections prescribe the policy, practice and procedures to be used in determining the extent of USACE jurisdiction. Note: WOTUS includes all waters pursuant to 33 CFR 328.3(a), and adjacent wetlands as that term is defined in 33 CFR 328.3(c).

b. Applicants shall identify all aquatic resources on the project site. All aquatic resources are presumed to be WOTUS unless an approved jurisdictional determination has been obtained from USACE that determines otherwise. Wetlands shall be delineated in accordance with the Corps of Engineers Wetlands Delineation Manual and the most recent Northcentral/Northeast Regional Supplement.

3. Mitigation (Avoidance, Minimization, and Compensatory Mitigation).

a. Activities shall be designed and constructed to avoid and minimize direct, indirect, secondary, and cumulative adverse effects, both temporary and permanent, to WOTUS to the maximum extent practicable at the project site (i.e., on site). Consideration of mitigation (avoiding, minimizing, rectifying, reducing, or compensating) is required to the extent necessary to ensure that the adverse effects to the aquatic environment are no more than minimal.

b. Applicants should consider riparian/forested buffers for stormwater management and low impact development (LID) best management practices (BMPs) to reduce impervious cover and manage stormwater to minimize impacts to the maximum extent practicable.

c. Compensatory mitigation[1] for effects to WOTUS, including direct, secondary and temporal[2], may be required for projects with permanent and temporary impacts that exceed the SV area limits to offset unavoidable impacts, which remain after all appropriate and practicable avoidance and minimization has been achieved, and to ensure that the adverse effects to the aquatic environment are no more than minimal. Proactive restoration projects or temporary impact work with no secondary effects may generally be excluded from this requirement.

d. Mitigation proposals shall follow the guidelines found in the Compensatory Mitigation for Losses of Aquatic Resources; Final Rule April 10, 2008; 33 CFR 332. Permittees considering the use of a monetary payment in-lieu of permittee-responsible mitigation as compensation for unavoidable impacts to WOTUS in the state of Vermont may utilize the Vermont In-Lieu Fee Program.

---

[1] Compensatory mitigation projects provided to offset losses of aquatic resources must comply with the applicable provisions of 33 CFR 332. Also reference the New England District Compensatory Mitigation Guidance at http://www.nae.usace.army.mil/Missions/Regulatory/Mitigation.aspx.

[2] Temporal loss: The time lag between the losses of aquatic resource functions caused by the permitted impacts and the replacement of aquatic resource functions at the compensatory mitigation site(s) (33 CFR 332.2).

e. Mitigation will likely be required for fills >5,000 SF. Information is provided at https://www.nae.usace.army.mil/Missions/Regulatory/Mitigation/.

4. Discretionary Authority. Notwithstanding compliance with the terms and conditions of this permit, USACE retains discretionary authority to require an IP review based on concerns for the aquatic environment or for any other factor of the public interest (33 CFR 320.4(a)). This authority is invoked on a case-by-case basis whenever USACE determines that the potential consequences of the proposal warrant IP review based on the concerns stated above. This authority may be invoked for projects with cumulative adverse environmental effects that are more than minimal, or if there is a special resource or concern associated with a particular project. Whenever USACE notifies an applicant that an IP may be required, authorization under these GPs is voided and no work may be conducted until a USACE IP is obtained or until USACE notifies the applicant that further review has demonstrated that the work may be reviewed under these GPs.

5. Fills Within 100-Year Floodplains. The activity shall comply with applicable Federal Emergency Management Agency (FEMA)-approved state of Vermont or municipal floodplain management requirements. Permittees should contact FEMA and/or the state of Vermont Floodplain Management Program regarding floodplain management requirements (see Section V for Federal and state-specific contact info).

6. Single and Complete Project. The term "single and complete project" is defined at 33 CFR 330.2(i) as the total project proposed or accomplished by one owner/developer or partnership or other association of owners/developers. The GPs shall not be used for piecemeal work and shall be applied to single and complete projects.

a. For non-linear projects, a single and complete project must have independent utility. Portions of a multi-phase project that depend upon other phases of the project do not have independent utility. Phases of a project that would be constructed even if the other phases were not built can be considered as separate single and complete projects with independent utility.

b. Unless USACE determines the activity has independent utility, all components of a single project and/or all planned phases of a multi-phased project (e.g., subdivisions should include all work such as roads, utilities, and lot development) shall be treated together as constituting one single and complete project.

c. For linear projects such as power lines or pipelines with multiple crossings, a "single and complete project" is all crossings of a single water of the U.S. (i.e. single waterbody) at a specific location. For linear projects crossing a single waterbody several times at separate and distant locations, each crossing is considered a single and complete project. However, individual channels in a braided stream or river, or individual arms of a large, irregularly-shaped wetland or lake, etc., are not separate waterbodies, and crossings of such features cannot be considered separately. If any crossing requires a PCN review or an IP review, then the entire linear project shall be reviewed as one project under PCN or the IP procedures.

7. Use of Multiple General Permits. The use of more than one GP for a single and complete project is prohibited, except when the acreage loss of WOTUS authorized by the GPs does not exceed the acreage limit of the GPs with the highest specified acreage limit. For example, if a road crossing over waters is constructed under GP 18, with an associated utility line crossing authorized by GP 6, if the maximum acreage loss of WOTUS for the total project is ≥1 acre it shall be evaluated as an IP.

8. USACE Property and Federal Projects.

a. Corps projects and property can be found at:*www.nae.usace.army.mil/Missions/Civil-Works* *and* *www.nan.usace.army.mil/missions/civil-works*

b. In addition to any authorization under these GPs, proponents must contact the USACE Real Estate Division at (978) 318-8585 for work occurring on or potentially affecting USACE properties and/or USACE-controlled easements to initiate reviews and determine what real estate instruments are necessary to perform work. Permittees may not commence work on USACE properties and/or USACE-controlled easements until they have received any required USACE real estate documents evidencing site-specific permission to work.

c. Any proposed temporary or permanent modification or use of a Federal project (including but not limited to a levee, dike, floodwall, channel, anchorage, seawall, bulkhead, jetty, wharf, pier or other work built but not necessarily owned by the United States), or any use which would obstruct or impair the usefulness of the Federal project in any manner, and/or would involve changes to the authorized Federal project's scope, purpose, and/or functioning, is not eligible for SV and will also require review and approval by USACE pursuant to Section 14 of the Rivers and Harbors Act of 1899 (33 USC 408) (Section 408).

d. A PCN is required for all work in, over, under, or within a distance of three times the authorized depth of a USACE FNP and may also require permission under Section 408.

e. Any structure or work that extends closer than a distance of three times the project's authorized depth to the horizontal limits of any FNP shall be subject to removal at the owner's expense prior to any future USACE dredging or the performance of periodic hydrographic surveys.

f. Where a Section 408 permission is required, written verification for the PCN will not be issued prior to the decision on the Section 408 permission request.

9. National Lands. Activities that impinge upon the value of any National Wildlife Refuge, National Forest, or any area administered by the NPS, USFWS or U.S. Forest Service (USFS) are not eligible for SV and require either a PCN or IP.

10. Wild and Scenic Rivers.

a. The following activities in designated rivers of the National Wild and Scenic River (WSR System, or in a river designated by Congress as a "study river" for possible inclusion in the system, require a PCN unless the NPS has determined in writing to the proponent that the proposed work will not adversely affect the WSR designation or study status:

i. Activities that occur in WSR segments, in and 0.25 miles up or downstream of WSR segments, or in tributaries within 0.25 miles of WSR segments;

ii. Activities that occur in wetlands within 0.25 miles of WSR segments;

iii. Activities that have the potential to alter free-flowing characteristics in WSR segments.

b. As of December 19, 2014, affected rivers in Vermont include: the Missisquoi River, from its headwaters at the Lowell/Westfield town line to the Canadian border in Troy (20.5 miles) and from the Canadian border in East Richford to Enosburgh Falls (14.6 miles); and the Trout River.

11. Historic Properties.

a. No undertaking shall cause effects (defined at 33 CFR 325 Appendix C and 36 CFR 800) on properties listed on, determined to be eligible for listing on, or potentially eligible for listing on

the National Register of Historic Places[3], including previously unknown historic properties within the permit area, unless USACE or another Federal action agency has satisfied the consultation requirements of Section 106 of the National Historic Preservation Act (NHPA). The SHPO, THPO and the National Register of Historic Places can assist with locating information on: i) previously identified historic properties; and ii) areas with potential for the presence of historic resources, which may require identification and evaluation by qualified historic preservation and/or archaeological consultants in consultation with USACE and the SHPO and/or THPO(s).

b. For activities eligible for SV, proponents must ensure and document that the activity will not cause effects as stated in 11(a).

c. Permittees must submit a PCN to USACE as soon as possible if the authorized activity may cause effects as stated in 11(a) to ensure that USACE is aware of any potential effects of the permitted activity on any historic property or cultural resource so that the consultation requirements of Section 106 of NHPA can be satisfied.

d. If a project proponent discovers any previously unknown historic, cultural, or archeological remains or artifacts while accomplishing the activity authorized by this permit, they must immediately notify the District Engineer of what they have found, and to the maximum extent practicable, avoid construction activities that may affect the remains and artifacts until the required coordination has been completed. The District Engineer will initiate the Federal, Tribal and state coordination required to determine if the items or remains warrant a recovery effort or if the site is eligible for listing in the National Register of Historic Places.

e. Federal agencies should follow their own procedures for complying with the requirements of Section 106 NHPA. Along with the application, Federal applicants shall provide USACE with the appropriate documentation to demonstrate compliance with those requirements.

f. Federal and non-federal applicants should coordinate with USACE before conducting any onsite archeological work (reconnaissance, surveys, recovery, etc.) requested by the SHPO or the THPO, as USACE will determine the permit area for the consideration of historic properties based on 33 CFR 325 Appendix C. This is to ensure that work done is in accordance with USACE requirements.

12. Federal Threatened and Endangered Species.

a. No activity is authorized under any GP which: i) is likely to directly or indirectly jeopardize the continued existence of a threatened or endangered species or a species proposed for such designation, as identified under the Federal Endangered Species Act (ESA), or which will directly or indirectly destroy or adversely modify the critical habitat of such species; or ii) “may affect” a listed species or critical habitat, unless ESA section 7 consultation addressing the effects of the proposed activity has been completed; or iii) is “likely to adversely affect” a listed species or critical habitat unless Section 7 consultation has been completed by USACE or another lead action agency in coordination with USACE; or iii) violates the ESA.

b. All prospective permittees shall obtain an Official Species List from the USFWS’s Information for Planning and Consultation (IPAC) found at: https://ecos.fws.gov/ipac/. This is applicable to SV eligible and PCN activities.

c. Non-federal permittees must submit a PCN if any listed species or designated critical habitat might be affected or is in the vicinity of the activity, or if the activity is located in designated critical habitat, and shall not begin work on the activity until notified by the district engineer that the requirements of the ESA have been satisfied and that the activity is authorized.

---

[3] The majority of historic properties are not listed on the National Register of Historic Places and may require identification and evaluation by qualified historic preservation and/or archaeological consultants in consultation with USACE and the SHPO and/or THPO.

An activity may remain eligible for SV if the only listed species affected is the northern long-eared bat (*Myotis septrionalis*), and

(i) the activity: 1) will not remove trees ≥3 inches dbh at any time of the year; or ≤10 trees ≥ 3 inches dbh between November 1 – March 31; and 2) is not within the "buffer" of a NLEB hibernacula or maternity roost tree; and 3) does not involve work on bridges or existing riprap associated with dams; or

(ii) only after Section 7 consultation has been completed by USACE under the 4(d) Rule Streamlined Consultation.

d. Federal agencies shall follow their own procedures for complying with the requirements of the ESA while ensuring that USACE and any other federal action agencies are included in the consultation process.

e. Non-federal representatives designated by USACE to conduct informal consultation or prepare a biological assessment shall follow the requirements in the designation document(s) and the ESA. Non-federal representatives shall also provide USACE with the appropriate documentation to demonstrate compliance with those requirements. USACE will review the documentation and determine whether it is sufficient to address ESA compliance for the GP activity, or whether additional ESA consultation is necessary.

f. The requirements to comply with Section 7 of the ESA may be satisfied by a programmatic agreement (PA) or programmatic consultation (PC) with USACE, the New England District, or another federal agency. New England District PAs and PCs are found at: *www.nae.usace.army.mil/Missions/Regulatory*

13. Navigation.

a. No activity may cause more than a minimal adverse effect on navigation.

b. Any safety lights and signals prescribed by the U.S. Coast Guard, through regulations must be installed and maintained at the permittee's expense on authorized facilities in navigable WOTUS.

c. Any structure or work that extends closer to the horizontal limits of any USACE FNP than a distance of three times the project's authorized depth shall be subject to removal at the owner's expense prior to any future USACE dredging or the performance of periodic hydrographic surveys. This is applicable to SV eligible and PCN activities.

d. There shall be no unreasonable interference with navigation by the existence or use of the activity authorized herein, and no attempt shall be made by the permittee to prevent the full and free use by the public of all navigable waters at or adjacent to the activity authorized herein.

e. The permittee understands and agrees that if future U.S. operations require the removal, relocation, or other alteration of the structure or work herein authorized, or if, in the opinion of the Secretary of the Army or his authorized representative, said structure or work shall cause unreasonable obstruction to the free navigation of the navigable waters, the permittee will be required, upon due notice from USACE, to remove, relocate, or alter the structural work or obstructions caused thereby, without expense to the U.S. No claim shall be made against the U.S. on account of any such removal or alteration.

f. A PCN is required for all work in, over or under an FNP or its buffer zone unless otherwise indicated in Section III as the work may also require a Section 408 permit.

14. Heavy Equipment in Wetlands. Operating heavy equipment (drill rigs, fixed cranes, etc.) within wetlands shall be minimized, and such equipment shall not be stored, maintained or repaired in wetlands, to the maximum extent practicable. Where construction requires heavy equipment operation in wetlands, the equipment shall: a) have low ground pressure (typically <3

psi); b) be placed on swamp/construction/timber mats (herein referred to as “construction mats” or “mats”) that are adequate to support the equipment in such a way as to minimize disturbance of wetland soil and vegetation; or c) be operated on adequately dry or frozen wetlands such that shear pressure does not cause subsidence of the wetlands immediately beneath equipment and upheaval of adjacent wetlands. Construction mats are to be placed in the wetland from the upland or from equipment positioned on swamp mats if working within a wetland. Construction mats should be carried, and not dragged, into position, where feasible. Other support structures that are capable of safely supporting equipment may be used with written USACE authorization. Similarly, the permittee may request written authorization from USACE to waive use of mats during frozen or dry conditions. An adequate supply of spill containment equipment shall be maintained on site. Construction mats should be managed in accordance with the following construction mat best management practices:

• Mats should be in good condition to ensure proper installation, use and removal.
• Where feasible, mats should be carried and not dragged unless they are being used as a grading implement.
• Where feasible, place mats in a location that would minimize the amount needed for the wetland crossing.
• Minimize impacts to wetland areas during installation, use, and removal.
• Install adequate erosion and sediment controls at approaches to mats to promote a smooth transition to, and minimize sediment tracking onto, mats.
• In most cases, mats should be placed along the travel area so that the individual boards are resting perpendicular to the direction of traffic. No gaps should exist between mats. Mats should be placed far enough on either side of the resource area to rest on firm ground.
• Provide standard construction mat BMP details to work crews.
• Construction mats shall be thoroughly cleaned before re-use to minimize spread of invasive species.

15. Temporary Fill.

a. Temporary fill, construction mats and corduroy roads shall be entirely removed as soon as they are no longer needed to construct the authorized work. Temporary fill shall be placed in its original location or disposed of at an upland site and suitably contained to prevent its subsequent erosion into WOTUS.

b. All temporary fill and disturbed soils shall be stabilized to prevent its eroding into WOTUS where it is not authorized. Work shall include phased or staged development to ensure only areas under active development are exposed and to allow for stabilization practices as soon as practicable. Temporary fill must be placed in a manner that will prevent it from being eroded by expected high flows.

c. Unconfined temporary fill authorized for discharge into WOTUS shall consist of material that minimizes impacts to water quality (e.g. washed stone, stone, etc.).

d. Appropriate measures must be taken to maintain normal downstream flows and minimize flooding to the maximum extent practicable when temporary structures, work, and discharges of dredged or fill material, including cofferdams, are necessary for construction activities, access fills, or dewatering of construction sites. Materials shall be placed in a location and manner that does not adversely impact surface or subsurface water flow into or out of the wetland. Temporary fill authorized for discharge into wetlands shall be placed on geotextile fabric or other appropriate material laid on the pre-construction wetland grade where practicable to minimize impacts and to facilitate restoration to the original grade. Construction mats are excluded from this requirement.

e. Construction debris and/or deteriorated materials shall not be located in WOTUS.

16. Restoration of Wetland Areas.

a. Upon completion of construction, all disturbed wetland areas (the disturbance of these areas must be authorized) shall be stabilized with a wetland seed mix containing only plant species native to New England and shall not contain any species listed in the "Invasive and Other Unacceptable Plant Species" Appendix D in the "New England District Compensatory Mitigation Guidance" found at http://www.nae.usace.army.mil/Missions/Regulatory/Mitigation.aspx.

b. The introduction or spread of invasive plant species in disturbed areas shall be controlled. If construction mats are to be used, they shall be thoroughly cleaned before re-use.

c. In areas of authorized temporary disturbance, if trees are cut they shall be cut at or above ground level and not uprooted in order to prevent disruption to the wetland soil structure and to allow stump sprouts to revegetate the work area, unless otherwise authorized.

d. Wetland areas where permanent disturbance is not authorized shall be restored to their original condition and elevation, which under no circumstances shall be higher than the pre-construction elevation. Original condition means careful protection and/or removal of existing soil and vegetation, and replacement back to the original location such that the original soil layering and vegetation schemes are approximately the same, unless otherwise authorized.

17. Bank Stabilization. Projects involving construction or reconstruction/maintenance of bank stabilization structures within USACE jurisdiction should be designed to minimize environmental effects, effects to neighboring properties, scour, etc. to the maximum extent practicable. For example, vertical bulkheads should only be used in situations where reflected wave energy can be tolerated. This generally eliminates bodies of water where the reflected wave energy may interfere with or impact on harbors, marinas, or other developed shore areas. A revetment is sloped and is typically employed to absorb the direct impact of waves more effectively than a vertical seawall. It typically has a less adverse effect on the beach in front of it, abutting properties and wildlife.

18. Soil Erosion and Sediment Controls.

a. Appropriate soil erosion and sediment controls[4] (hereinafter referred to as "controls") must be used and maintained in effective operating condition during construction, and all exposed soil and other fills, as well as any work below the OHWM, must be permanently stabilized at the earliest practicable date. Permittees are encouraged to perform work within WOTUS during periods of low-flow or no-flow. Areas of temporary fill and/or cofferdams must be included in total waterway/wetlands impacts to determine applicability of the GPs.

b. No dewatering shall occur with direct discharge to waters or wetlands. Excess water in isolated work areas shall be pumped or directed to a sedimentation basin, tank or other dewatering structures in an upland area adequately separated from waters or wetlands where suspended solids shall be removed prior to discharge back into waters or wetlands. All discharge points back into waters and wetlands shall use appropriate energy dissipaters and erosion and sedimentation control BMPs.

c. Temporary controls shall be removed upon completion of work, but not until all exposed soil and other fills, as well as any work waterward of the OHWM, are permanently stabilized at the

[4] Appropriate soil erosion, sediment and turbidity controls include cofferdams, bypass pumping around barriers immediately up and downstream of the work footprint (i.e., dam and pump), installation of sediment control barriers (i.e., silt fence, vegetated filter strips, geotextile silt fences, filter tubes, erosion control mixes, hay bales or other devices) downhill of all exposed areas, stream fords, retention of existing vegetated buffers, application of temporary mulching during construction, phased construction, and permanent seeding and stabilization, etc.

earliest practicable date. Sediment and debris collected by these devices shall be removed and placed at an upland location in a manner that will prevent its later erosion into a waterway or wetland. Controls may be left in place if they are biodegradable, and flows and aquatic life movements are not disrupted.

d. The material within sandbags shall not be released during their removal, and trenches must be backfilled as soon as practicable to reduce turbidity impact duration.

19. Aquatic Life Movements and Management of Water Flows.

a. No activity may substantially disrupt the necessary life cycle movements of those species of aquatic life indigenous to the waterbody, including those species that normally migrate through the area, unless the activity's primary purpose is to impound water. Unless otherwise stated, activities permanently impounding water in a stream require a PCN to ensure impacts to aquatic life species are avoided and minimized. All permanent and temporary crossings of waterbodies and wetlands shall be:

i. Suitably culverted, bridged, or otherwise designed and constructed to maintain low flows to sustain the movement of aquatic species; and

ii. Properly aligned and constructed to prevent bank erosion or streambed scour both adjacent to and inside the crossing.

b. To avoid adverse impacts on aquatic organisms, the low flow channel/thalweg shall remain unobstructed during periods of low flow, except when it is necessary to perform the authorized work.

c. To the maximum extent practicable, the pre-construction course, condition, capacity, and location of open waters must be maintained for each activity, including stream channelization and storm water management activities. The activity must be constructed to withstand expected high flows. The activity shall not restrict or impede the passage of normal or high flows, unless the primary purpose of the activity is to impound water or manage high flows. The activity may alter the preconstruction course, condition, capacity, and location of open waters if it benefits the aquatic environment (e.g., stream restoration or relocation activities).

d. Activities that temporarily or permanently impact upstream or downstream flood conditions require a PCN.

20. Waterway/Wetland Work and Crossings.

a. All permanent crossings of rivers, streams, brooks, etc. (hereon referred to as "streams") shall meet the following performance standards in order to qualify for SV:

i. Design the structure to maintain a streambed composition and form throughout the culvert similar to and continuous with the adjacent reaches. To do this:
- Design and install streambed material and bedforms if not adequately supplied and developed naturally,
- Design profile and alignment through structure similar to those of adjacent stream reaches,
- Design culvert elevation to remain embedded for the life of the structure and in consideration of future channel conditions.

ii. Maintain velocities, turbulence and depths within the structure similar to those found in adjacent stream reaches across a range of desired flows.

b. The requirements to comply with the performance standards in GC 20a. above in order to proceed as a SV project do not apply to the following:

i. Temporary crossings in place for less than 90 days. Temporary culverts must be embedded unless they're installed during low flow (July 1 – October 1) and it's placed on geotextile fabric laid on the stream bed to ensure restoration to the original grade.

c. Applicants proposing new crossings, or maintenance or replacement of serviceable crossings should refer to the Guidelines for the Design of Stream/Road Crossings for Passage of Aquatic Organisms in Vermont.

d. Applicants shall use the least intrusive and environmentally damaging method to construct the stream crossing, following this sequential minimization process: bridge spans, open bottom arches or embedded culverts.

e. Permanent and temporary crossings of waterbodies and wetlands shall be installed in such a manner as to preserve hydraulic and ecological connectivity, on either side of the crossing. The permittee shall take necessary measures to correct wetland damage due to lack of hydraulic connectivity.

f. Projects using retrofit methods increasing flow velocity or slip lining (retrofitting an existing culvert by inserting a smaller diameter pipe) require a PCN, either as new or maintenance activities.

g. No projects involving open trench excavation in flowing waters, except riprap installation, are allowed under SV. Open trench excavation projects may qualify for SV provided (1) the work doesn't occur in flowing waters (requires using management techniques such as temporary flume pipes, culverts, cofferdams, etc.) and (2) normal flows are maintained upstream and downstream of the project area.

h. For projects that otherwise meet the terms of SV, in-stream construction work shall be conducted only during the low flow period of July 1 to October 1 in any year. Projects that are conducted outside that time period require a PCN, regardless of the waterway and/or wetland impact area.

21. Discharge of Pollutants. All activities involving any discharge of pollutants into WOTUS authorized under these GPs shall comply with applicable water quality standards, effluent limitations, standards of performance, prohibitions, and pretreatment standards and management practices established pursuant to the CWA (33 U.S.C. 1251), and applicable state and local laws. If applicable water quality standards, limitations, etc., are revised or modified during the term of this permit, the authorized work shall be modified to conform with these standards within 6 months of the effective date of such revision or modification, or within a longer period of time deemed reasonable by the District Engineer in consultation with the Regional Administrator of the EPA. Applicants may presume that State Water Quality Standards are met with the issuance of a 401 WQC or waiver (Applicable only to the Section 404 activity).

22. Spawning, Breeding, and Migratory Areas.

a. Jurisdictional activities and impacts such as excavations, discharges of dredged or fill material, and/or suspended sediment producing activities in jurisdictional waters that provide value as fish migratory areas, fish and shellfish spawning or nursery areas, or amphibian and migratory bird breeding areas, during spawning or breeding seasons shall be avoided and minimized to the maximum extent practicable.

b. Jurisdictional activities in WOTUS that provide value as breeding areas for migratory birds must be avoided to the maximum extent practicable. The permittee is responsible for obtaining any "take" permits required under the USFWS's regulations governing compliance with the Migratory Bird Treaty Act or the Bald and Golden Eagle Protection Act. The permittee should contact the appropriate local office of the USFWS to determine if such "take" permits are required for a particular activity.

23. Storage of Seasonal Structures. Seasonal or recreational structures such as pier sections, floats, etc., that are removed from the waterway for a portion of the year shall be stored in an upland location, located above the OHWM and not in wetlands.

24. Environmental Functions and Values. The permittee shall make every reasonable effort to carry out the construction or operation of the work authorized herein in a manner that minimizes any adverse impacts on existing fish, wildlife, and the environmental functions to the extent practicable. The permittee will discourage the establishment or spread of plant species identified as non-native invasive species by any federal or state agency.

25. Vernal Pools.

a. On projects requiring a PCN, vernal pools must be identified on the plan showing aquatic resource delineations.

b. A PCN is required if a discharge of dredged or fill material is proposed in a vernal pool located within WOTUS.

c. Adverse impacts to vernal pools, vernal pool envelopes, and critical terrestrial habitats should be avoided and minimized to the maximum extent practicable.

d. GC 25(b) and (c) do not apply to projects that are within a municipality that meets the provisions of a USACE-approved VP Special Area Management Plan (VP SAMP) and are otherwise eligible for SV, and the applicant meets the requirements to utilize the VP SAMP.

26. Invasive Species. The introduction, spread, or the increased risk of invasion of invasive plant or animal species on the project site, into new or disturbed areas, or areas adjacent to the project site caused by the site work shall be avoided. Hence, swamp and timber mats and construction equipment shall be thoroughly cleaned before reuse/relocation.

27. Permit/Authorization Letter On-Site. For PCN projects, the permittee shall ensure that a copy of these GPs and the accompanying authorization letter are at the work site (and the project office) whenever work is being performed, and that all personnel with operational control of the site ensure that all appropriate personnel performing work are fully aware of its terms and conditions. The entire permit authorization shall be made a part of any and all contracts and sub-contracts for work that affect areas of USACE jurisdiction at the site of the work authorized by these GPs. This shall be achieved by including the entire permit authorization in the specifications for work. The term “entire permit authorization” means these GPs, including general conditions and the authorization letter (including its drawings, plans, appendices and other attachments), and also includes permit modifications. If the authorization letter is issued after the construction specifications, but before receipt of bids or quotes, the entire permit authorization shall be included as an addendum to the specifications. If the authorization letter is issued after receipt of bids or quotes, the entire permit authorization shall be included in the contract or sub-contract as a change order. Although the permittee may assign various aspects of the work to different contractors or sub-contractors, all contractors and sub-contractors shall be obligated by contract to comply with all environmental protection provisions contained within the entire authorization letter, and no contract or sub-contract shall require or allow unauthorized work in areas of USACE jurisdiction.

28. Inspections. The permittee shall allow USACE to make periodic inspections at any time deemed necessary in order to ensure that the work is being or has been performed in accordance with the terms and conditions of this permit. To facilitate these inspections, the permittee shall complete and return the Work Start Notification Form and the Compliance Certification Form to

USACE when provided with a PCN verification letter. The USACE may also require post-construction engineering drawings for completed work or post-dredging survey drawings for any dredging work.

29. Maintenance. The permittee shall maintain the activity authorized by these GPs in good condition and in conformance with the terms and conditions of this permit. This does not include maintenance of dredging projects. Maintenance dredging is subject to the review thresholds in General Permit 7 in Appendix A, as well as any conditions included in a written USACE authorization. Maintenance dredging includes only those areas and depths previously authorized and dredged. Some maintenance activities may not be subject to regulation under Section 404 in accordance with 33 CFR 323.4(a)(2).

30. Property Rights. Per 33 CFR 320.4(g)(6), these GPs do not convey any property rights, either in real estate or material, or any exclusive privileges, nor does it authorize any injury to property or invasion of rights or any infringement of federal, state, or local laws or regulations.

31. Transfer of GP Verifications. If the permittee sells the property associated with a GP verification, the permittee may transfer the GP verification to the new owner by submitting a letter to USACE to validate the transfer. A copy of the GP verification shall be attached to the letter, the letter shall contain the name, address, phone number and email of the transferee (new owner), shall include the following statement and signature, and be emailed to cenae-r-vt@usace.army.mil or mailed to: U.S. Army Corps of Engineers, Vermont Project Office, 11 Lincoln Street, Room 210, Essex Junction, Vermont 05452.

When the structures or work authorized by this general permit are still in existence at the time the property is transferred, the terms and conditions of this general permit, including any special conditions, will continue to be binding on the new owner(s) of the property. To validate the transfer of this general permit and the associated liabilities associated with compliance with its terms and conditions, have the transferee sign and date below.

_____*(Transferee Printed Name)*
_____(Transferee Signature)
_____(Date)

32. Modification, Suspension, and Revocation. These GPs and any individual authorizations issued thereof may be modified, suspended, or revoked in whole or in part pursuant to the policies and procedures of 33 CFR 325.7, and any such action shall not be the basis for any claim for damages against the United States.

33. Special Conditions. The USACE may impose other special conditions on a project authorized pursuant to these GPs that are determined necessary to minimize adverse navigational and/or environmental effects or based on any other factor of the public interest. These may be based on concerns from the VT ANR, SHPO, THPO or a Federal resource agency. Failure to comply with all conditions of the authorization, including special conditions, will constitute a permit violation and may subject the permittee to criminal, civil, or administrative penalties and/or restoration.

34. False or Incomplete Information. If USACE makes a determination regarding the eligibility of a project under this permit and subsequently discovers that it has relied on false, incomplete, or inaccurate information provided by the permittee, the authorization will not be valid, and the U.S. government may institute appropriate legal proceedings.

35. Abandonment. If the permittee decides to abandon the activity authorized under this GP, unless such abandonment is merely the transfer of property to a third party, he/she may be required to restore the area to the satisfaction of USACE.

36. Enforcement cases. These GPs do not apply to any existing or proposed activity in USACE jurisdiction associated with an ongoing USACE or EPA enforcement action, until such time as the enforcement action is resolved or USACE determines that the activity may proceed independently without compromising the enforcement action.

37. Water Quality. Applicants shall satisfy any conditions imposed by the State of Vermont and EPA, where applicable, in their Clean Water Act Section 401 WQC for these GPs, or in any Individual Section 401 WQC. See Section V. for state-specific contact information and to determine if any action is required to obtain a 401 WQC. USACE may require additional water quality management measures to ensure that the authorized activity does not cause or contribute to a violation of water quality standards. All projects authorized by these GPs shall be designed, constructed and operated to minimize or eliminate the discharge of pollutants.

38. Duration of Authorization.

a. These GPs expire five years from the date issued as listed at the top of the cover sheet. Activities authorized by these GPs that have either commenced (i.e., are under construction) or are under contract to commence in reliance upon this authorization will have an additional year from the expiration date to complete the work. The permittee must be able to document to USACE's satisfaction that the project was under construction or under contract by the expiration date of these GPs. If work is not completed within the one-year extended timeframe, the permittee must contact USACE. The USACE may issue a new authorization, provided the project meets the terms and conditions of the GPs in effect at the time.

b. Activities authorized under these GPs will remain authorized until the GPs expire, unless discretionary authority has been exercised on a case-by-case basis to modify, suspend, or revoke the authorization in accordance with 33 CFR 325.2(e)(2). Activities completed under the SV or PCN authorizations of these GPs will continue to be authorized after its expiration date.

V. CONTACTS FOR VERMONT GENERAL PERMITS

1. Federal

U.S. Army Corps of Engineers
New England District, Regulatory Division
Vermont Project Office
11 Lincoln Street, Room 210
Essex Junction, Vermont 05452
(802) 872-2893, (802) 879-7638 fax
www.nae.usace.army.mil/missions/regulatory
cenae-r-vt@usace.army.mil

U.S. Environmental Protection Agency
5 Post Office Square, Suite 100
Boston, Massachusetts 02109
(617) 918-1692

U.S. Fish and Wildlife Service
70 Commercial Street, Suite 300
Concord, New Hampshire 03301-5087
(603) 223-2541

National Park Service
North Atlantic Region
15 State Street
Boston, Massachusetts 02109
(617) 223-5203

2. Historic Resources

State Historic Preservation Officer
Division for Historic Preservation
National Life Building
Drawer 20
Montpelier, Vermont 05620-0501
(802) 828-3211

Tribal Historic Preservation Officer
c/o Stockbridge-Munsee Community
86 Spring Street
Williamstown, Massachusetts 01267
(413) 884-6048
Area of concern: Addison, Rutland and Bennington Counties
thpo@mohican-nsn.gov

Tribal Historic Preservation Officer
c/o Wampanoag Tribe of Gay Head (Aquinnah)
20 Black Brook Road
Aquinnah, Massachusetts 02535
(508) 645-9265 THPO@wampanoagtribe-nsn.gov
Area of Concern: All Vermont counties except Addison, Rutland and Bennington

3. Vermont Agency of Natural Resources

Department of Environmental Conservation
Wetlands Program
Watershed Management Division
1 National Life Drive, Main 2
Montpelier, VT 05620-3522

Department of Environmental Conservation
River Management Program
Watershed Management Division
1 National Life Drive, Main 2
Montpelier, VT 05620-3522

Department of Environmental Conservation
Lakes and Ponds Program
Watershed Management Division
1 National Life Drive, Main 2
Montpelier, VT 05620-3522

Department of Environmental Conservation
Dam Safety Program
Facilities Engineering Division
1 National Life Drive, Main 2
Montpelier, VT 05620-3522

Vermont Department of Fish & Wildlife
1 National Life Drive, Main 2
Montpelier, VT 05620-3522

State endangered species
Vermont Department of Fish & Wildlife
Nongame and Natural Heritage Program
1 National Life Drive, Main 2
Montpelier, VT 05620-3522

VI. DEFINITIONS

Action Area: The "Endangered Species Consultation Handbook – Procedures for Conducting Consultation and Conference Activities Under Section 7 of the ESA," defines action area as "all areas to be affected directly or indirectly by the federal action and not merely the immediate area involved in the action. [50 CFR 402.02]."
Artificial Reef: A structure which is constructed or placed in waters for the purpose of enhancing fishery resources and commercial and recreational fishing opportunities.
Attendant Features: Occurring with or as a result of; accompanying.
Biodegradable: A material that decomposes into elements found in nature within a reasonably short period of time and will not leave a residue of plastic or a petroleum derivative in the environment after degradation. In contrast, degradable plastics break down into plastic fragments that remain in the environment after degradation. Examples of biodegradable materials include jute, sisal, cotton, straw, burlap, coconut husk fiber (coir) or excelsior. In contrast, degradable plastics break down into plastic fragments that remain in the environment after degradation. Photodegradable, UV degradable or Oxo- (bio)degradable plastics are not considered biodegradable under this GP.
Boating facilities: These provide, rent, or sell mooring space, such as marinas, boat/yacht clubs, boat yards, dockominiums, town facilities, etc. Not classified as boating facilities are piers shared between two abutting properties or town mooring fields that charge an equitable user fee based on the actual costs incurred.
Compensatory mitigation: The restoration (reestablishment or rehabilitation), establishment (creation), enhancement, and/or, in certain circumstances, preservation of aquatic resources for the purposes of offsetting unavoidable adverse impacts which remain after all appropriate and practicable avoidance and minimization has been achieved.
Construction mats: Construction, swamp and timber mats (herein referred to as "construction mats") are generic terms used to describe structures that distribute equipment weight to prevent wetland damage while facilitating passage and providing work platforms for workers and equipment. They are comprised of sheets or mats made from a variety of materials in various sizes. A timber mat consists of large timbers bolted or cabled together.
Currently serviceable: Useable as is or with some minor maintenance, but not so degraded as to essentially require reconstruction.
Direct effects: The loss of aquatic ecosystem within the footprint of the discharge of dredged or fill material. Direct effects are caused by the action and occur at the same time and place.
Dredged material and discharge of dredged material: These are defined at 33 CFR 323.2(c) and (d). The term "dredged material" means material that is excavated or dredged from waters of the United States.
Discharge: The term "discharge" means any discharge of dredged or fill material into waters of the United States.
Enhancement: The manipulation of the physical, chemical, or biological characteristics of an aquatic resource to heighten, intensify, or improve a specific aquatic resource function(s). Enhancement results in the gain of selected aquatic resource function(s), but may also lead to a decline in other aquatic resource function(s). Enhancement does not result in a gain in aquatic resource area.
Ephemeral stream: A stream with flowing water only during, and for a short duration after, precipitation events in a typical year. Ephemeral stream beds are located above the water table year-round. Groundwater is not a source of water for the stream. Runoff from rainfall is the primary source of water for stream flow.

Establishment (creation): The manipulation of the physical, chemical or biological characteristics present to develop an aquatic resource that did not previously exist at an upland site. Establishment results in a gain in aquatic resource area.
Expansions: Work that increases the footprint of fill, depth of basin or drainage feature, structures or floats, or slip capacity.
Fill material & discharge of fill material: These are defined at 33 CFR 323.2(e) and (f). The term fill material is defined as material placed in WOTUS where the material has the effect of either replacing any portion of a water of the U.S. with dry land or changing the bottom elevation of any portion of a water of the U.S.
Federal navigation projects (FNPs): These areas are maintained by USACE, authorized, constructed and maintained on the premise that they will be accessible and available to all on equal terms. They are comprised of USACE Federal anchorages, Federal channels and Federal turning basins. The following are FNPs in VT, and more information, including the limits, is provided at www.nae.usace.army.mil/missions/navigation and www.nan.usace.army.mil/Missions/Civil-Works/:

Burlington Harbor
Channel Between the North and South Hero Islands
Gordons Landing
Narrows of Lake Champlain
Otter Creek
St. Albans Harbor
Swanton Harbor

Flume: An open artificial water channel, in the form of a gravity chute that leads water from a diversion dam or weir completely aside a natural flow. A flume can be used to measure the rate of flow.
Historic Property: Any prehistoric or historic district, site (including archaeological site), building, structure, or other object included in, or eligible for inclusion in, the National Register of Historic Places maintained by the Secretary of the Interior. This term includes artifacts, records, and remains that are related to and located within such properties. The term includes properties of traditional religious and cultural importance to an Indian tribe or Native Hawaiian organization and that meet the National Register criteria (36 CFR 60).
Independent utility: A test to determine what constitutes a single and complete non-linear project in the USACE regulatory program. A project is considered to have independent utility if it would be constructed absent the construction of other projects in the project area. Portions of a multi-phase project that depend upon other phases of the project do not have independent utility. Phases of a project that would be constructed even if the other phases were not built can be considered as separate single and complete projects with independent utility.
Indirect effects: Effects that are caused by the activity and are later in time or farther removed in distance, but are still reasonably foreseeable.
Individual Permit: A Department of the Army authorization that is issued following a case-by-case evaluation of a specific structure or work in accordance with the procedures of 33 CFR 322, or a specific project involving the proposed discharge(s) in accordance with the procedures of 33 CFR 323, and in accordance with the procedures of 33 CFR 325 and a determination that the proposed discharge is in the public interest pursuant to 33 CFR 320.
Intermittent stream: A stream with flowing water during certain times of the year, when groundwater provides water for stream flow. During dry periods, intermittent streams may not have flowing water. Runoff from rainfall is a supplemental source of water for stream flow.
Maintenance: Maintenance does not include any modification that changes the character, scope, or size of the original fill design.

Mechanized land clearing: Land clearing activities using mechanized equipment such as backhoes or bulldozers with sheer blades, rakes or discs constitute point source discharges and are subject to section 404 jurisdiction when they take place in wetlands are waters of the U.S (Regulatory Guidance Letter 90-05).
Minor deviations: Deviations in the structure's configuration or filled area, including those due to changes in materials, construction techniques, or current construction codes or safety standards, which are necessary to make repair, rehabilitation, or replacement are permitted, provided the adverse environ-mental effects resulting from such repair, rehabilitation, or replacement are minimal.
Navigable waters of the United States: These are a subset of WOTUS and are defined at 33 CFR 329. The jurisdictional limits (33 CFR 329.11) extend laterally to the entire water surface and bed of a navigable waterbody, which include all the land and waters below OHWM. Jurisdiction thus extends to the edge (as determined above) of all such waterbodies, even though portions of the waterbody may be extremely shallow or obstructed by shoals, vegetation or other barriers. Marshlands and similar areas are thus considered navigable in law, but only so far as the area is subject to inundation by the ordinary high waters. In Vermont these waters are: the Connecticut River, Lake Champlain, Lake Memphremagog, Wallace Pond, Ompompanoosuc River (to mile 3.8), Waits River (to mile 0.9), the Black River (mouth to mile 25 in Craftsbury), the Battenkill River (to mile 50 in Manchester), the Lamoille River (mouth to mile 79 in Greensboro), the Missisquoi River (including the North Branch, from the mouth to mile 88.5 in Lowell), Otter Creek (mouth to mile 63.8 in Procter), Winooski River (mouth to Marshfield), Moose River (from Passumpsic River to the Victory Town Line), Nulhegan River (mouth to its source including the East Branch, the Black Branch and the Yellow Branch), Paul Stream (mouth to the source), East Branch of the Passumpsic River (from the confluence with the Passumpsic River to East Haven), Passumpsic River (mouth to confluence with the East Branch), White River (mouth to its source), Wells River (mouth to Groton Pond).
Ordinary High Water Mark (OHWM): A line on the shore established by the fluctuations of water and indicated by physical characteristics, or by other appropriate means that consider the characteristics of the surrounding areas. See 33 CFR 328.3(e).
Perennial stream: A stream with flowing water year-round during a typical year. The water table is located above the stream bed for most of the year. Groundwater is the primary source of water for stream flow. Runoff from rainfall is a supplemental source of water for stream flow.
Practicable: Available and capable of being done after taking into consideration cost, existing technology, and logistics in light of overall project purposes.
Permanent impacts: Permanent impacts means WOTUS that are permanently affected by filling, flooding, excavation, or drainage because of the regulated activity. Permanent impacts include permanent discharges of dredged or fill material that change an aquatic area to dry land, increase the bottom elevation of a waterbody, or change the use of a waterbody.
Preservation: The removal of a threat to, or preventing the decline of, aquatic resources by an action in or near those aquatic resources. This term includes activities commonly associated with the protection and maintenance of aquatic resources through the implementation of appropriate legal and physical mechanisms. Preservation does not result in a gain of aquatic resource area or functions.
Re-establishment: The manipulation of the physical, chemical, or biological characteristics of a site with the goal of returning natural/historic functions to a former aquatic resource. Reestablishment results in rebuilding a former aquatic resource and results in a gain in aquatic resource area and functions.
Rehabilitation: The manipulation of the physical, chemical, or biological characteristics of a site with the goal of repairing natural/historic functions to a degraded aquatic resource.

Rehabilitation results in a gain in aquatic resource function, but does not result in a gain in aquatic resource area.

Restoration: The manipulation of the physical, chemical, or biological characteristics of a site with the goal of returning natural/historic functions to a former or degraded aquatic resource. For the purpose of tracking net gains in an aquatic resource area, restoration is divided into two categories: reestablishment and rehabilitation.

Secondary effects: These are effects on an aquatic ecosystem that are associated with a discharge of dredged or fill materials, but do not result from the actual placement of the dredged or fill material. Information about secondary effects on aquatic ecosystems shall be considered prior to the time final Section 404 action is taken by permitting authorities. Some examples of secondary effects on an aquatic ecosystem are a) aquatic areas drained, flooded, fragmented, or mechanically cleared, b) fluctuating water levels in an impoundment and downstream associated with the operation of a dam, c) septic tank leaching and surface runoff from residential or commercial developments on fill, and d) leachate and runoff from a sanitary landfill located in WOTUS See 40 CFR 230.11(h).

Special aquatic sites (SAS): These include inland wetlands, mud flats, vegetated shallows (submerged aquatic vegetation), and riffle and pool complexes. These are defined at 40 CFR 230.3 and listed in 40 CFR 230 Subpart E.

Streambed: The substrate of the stream channel between the OHW marks. The substrate may be bedrock or inorganic particles that range in size from clay to boulders. Wetlands contiguous to the streambed, but outside of the OHW marks, are not considered part of the streambed.

Stream channelization: The manipulation of a stream's course, condition, capacity, or location that causes more than minimal interruption of normal stream processes. A channelized stream remains a water of the United States.

Structure: An object that is arranged in a definite pattern of organization. Examples of structures include, without limitation, any pier, boat dock, boat ramp, wharf, dolphin, weir, boom, breakwater, bulkhead, revetment, riprap, jetty, artificial island, artificial reef, permanent mooring structure, power transmission line, permanently moored floating vessel, piling, aid to navigation, or any other manmade obstacle or obstruction.

Temporary impacts: Temporary impacts include, but are not limited to, WOTUS that are temporarily filled, flooded, excavated, drained or mechanically cleared because of the regulated activity.

Utility Line: Any pipe or pipeline for the transportation of any gaseous, liquid, liquescent, or slurry substance, for any purpose, and any cable, line, or wire for the transmission for any purpose of electrical energy, telephone, data, and telegraph messages, and radio and television communication. The term "utility line" does not include activities that drain a water of the U.S., such as drainage tile or French drains, but it does apply to pipes conveying drainage from another area.

Vegetated shallows: Permanently inundated areas that under normal circumstances support communities of rooted aquatic vegetation in rivers and lakes. Note: These areas are also commonly referred to as submerged aquatic vegetation (SAV).

Vernal pools (VPs): For the purposes of these GPs, VPs are depressional wetland basins that typically go dry in most years and may contain inlets or outlets, typically of intermittent flow. Vernal pools range in both size and depth depending upon landscape position and parent material(s). In most years, VPs support one or more of the following obligate indicator species: wood frog, spotted salamander, blue-spotted salamander, marbled salamander, Jefferson's salamander and fairy shrimp. However, they should preclude sustainable populations of predatory fish.

Water diversions: Water diversions are activities such as bypass pumping (e.g., “dam and pump”) or water withdrawals. Temporary flume pipes, culverts or cofferdams where normal flows are maintained within the stream boundary’s confines aren’t water diversions. “Normal flows” are defined as no change in flow from pre-project conditions.

Weir: A barrier across a river designed to alter the flow characteristics. In most cases, weirs take the form of a barrier, smaller than most conventional dams, across a river that causes water to pool behind the structure (not unlike a dam) and allows water to flow over the top. Weirs are commonly used to alter the flow regime of the river, prevent flooding, measure discharge and help render a river navigable.

Waters of the United States (WOTUS): Waters of the United States are defined in 33 CFR 328.3. These waters include more than navigable WOTUS and are the waters where permits are required for the discharge of dredged or fill material pursuant to Section 404 of the Clean Water Act. WOTUS include jurisdictional wetlands.

VERMONT

State of Vermont
Highways- PDB Environmental Section
219 N. Main Street
Barre, VT 05641

Agency of Transportation

Memorandum

To: Project File Plymouth ER P23-1(328)

From: Jessie Johnson, VTrans Biologist

Date: 9/9/25

Subject: **US Corps of Engineers (USCOE) General Permit Self Verification Memo**

I have reviewed project Plymouth ER P23-1(328) for potential impacts to USCOE jurisdictional areas (wetlands and waterways). I have determined the project qualifies for Self-Verification (SV) under the **COE VT General Permit NAE-2022-00024**. All General Conditions (conditions 1-38 pages 27-38,) of the VTGP apply to this project and a copy of the permit will need to be included in the contract documents. Respective Contractors completing work authorized under this VTGP need to be familiar with all conditions of this permit. Please pay particular attention to conditions 19 & 20 as there are important in-stream time of year restrictions and culvert requirements under the SV process, as well as other special requirements. The VTGP is effective from December 6, 2022, through December 6, 2027.

If the Contractor proposes modified or additional project limits, the project may no longer qualify for coverage under the SV process. It is the Contractor's responsibility to seek coverage of any project changes under the SV process, VTGP, or with a USCOE Individual Permit. Please contact the USCOE at (802) 872-2893 for any questions.

Attached

COE VT GP NAE 2022-00024

USCOE VT Project Office Contact:

U.S. Army Corps of Engineers
New England District,
Vermont Project Office
11 Lincoln Street, Room 210
Essex Junction, Vermont 05452
(802) 872-2893, (802) 879-7638 fax
www.nae.usace.army.mil/missions/regulatory
cenae-r-vt@usace.army.mil

General Permit No.: NAE-2022-00024 Effective Date: December 6, 2022
Applicant: General Public in the State of Vermont Expiration Date: December 6, 2027

DEPARTMENT OF THE ARMY GENERAL PERMITS FOR THE STATE OF VERMONT

The New England District of the U.S. Army Corps of Engineers (USACE) hereby issues twenty-one (21) regional general permits (GPs) for activities subject to USACE jurisdiction in waters of the United States (WOTUS), including navigable waters, within the boundaries of the state of Vermont. These GPs are issued in accordance with USACE regulations at 33 CFR 320–332 (see 33 CFR 325.2(c)(1)). These GPs will provide protection to the aquatic environment and the public interest while effectively authorizing activities that have no more than minimal individual and cumulative adverse environmental effects.

This document contains the following sections:

		Page
SECTION I.	JURISDICTION/AUTHORITY TO ISSUE PERMITS	2
SECTION II.	REVIEW CATEGORIES AND APPLICATION PROCEDURES	2-4
SECTION III.	GENERAL PERMITS	4-26
SECTION IV.	GENERAL CONDITIONS	27-38
SECTION V.	CONTACTS	39
SECTION VI.	DEFINITIONS	40-44

In issuing these GPs, the Federal Government does not assume any liability for the following: (a) damages to the permitted project or uses thereof as a result of other permitted or unpermitted activities or from natural causes; (b) damages to the permitted project or uses thereof as a result of current or future activities undertaken by or on behalf of the U.S. in the public interest; (c) damages to persons, property or to other permitted or unpermitted activities or structures caused by the activity authorized by any of the GPs; (d) design or construction deficiencies associated with the permitted work; or (e) damage claims associated with any future modification, suspension or revocation of these permits.

Tammy R. Turley
Tammy R. Turley
Chief, Regulatory Division

December 6, 2022
Date

SECTION I. JURISDICTION/AUTHORITY TO ISSUE PERMITS

1. A Department of the Army Permit is required from USACE for the following regulated activities:

a. The construction of any structure in, over, or under any navigable water of the U.S. (see 33 CFR 328), the excavating or dredging from or depositing of material in such waters, or the accomplishment of any other work affecting the course, location, condition, or capacity of such waters. The USACE regulates these activities under Section 10 of the Rivers and Harbors Act of 1899 (see 33 CFR 322); and

b. The discharge of dredged or fill material and certain discharges associated with excavation into WOTUS including wetlands. The USACE regulates these activities under Section 404 of the Clean Water Act (see 33 CFR 323).

2. Related laws: 33 CFR 320.3 includes a list of related laws including, but not limited to, Section 14 of the Rivers and Harbors Act of 1899 (33 USC 408, "Section 408"), Section 401 of the Clean Water Act, Section 402 of the Clean Water Act, Section 307(c) of the Coastal Zone Management Act of 1972, Section 106 of the National Historic Preservation Act of 1966, Section 7 of the Endangered Species Act, the Fish and Wildlife Coordination Act of 1956, the Magnuson-Stevens Fishery Conservation and Management Act, Section 302 of the Marine Protection, Research and Sanctuaries Act of 1972, and Section 7(a) of the Wild and Scenic Rivers Act.

3. In order for an authorization under these GPs to be valid, a Water Quality Certification (WQC) under Section 401 of the CWA (33 USC 1341) or waiver thereof must be obtained from the Vermont Agency of Natural Resources (VT ANR), Watershed Management Division prior to the commencement of work in USACE jurisdiction. The VT ANR has granted an Individual WQC for all activities authorized under these GPs provided those activities meet the criteria as contained in these GPs and USACE notifies VT ANR of projects obtaining written verification under these GPs. The VT ANR will respond within the same response times required of the Federal resource agencies.

SECTION II. REVIEW CATEGORIES AND APPLICATION PROCEDURES

1. In order for activities to qualify for these GPs, they shall meet the terms and conditions of this document, including the eligibility criteria listed in Section III and the general conditions (GCs) listed in Section IV. The USACE will consider any activity requiring USACE authorization to be unauthorized if that activity is under construction or completed and does not comply with all of the terms and conditions of the GPs. The USACE will evaluate unauthorized activities for enforcement action under 33 CFR part 326. Any activity not specifically listed may still be eligible for authorization under these GPs; prospective permittees are advised to contact USACE for specific eligibility determinations.

2. Project proponents are encouraged to contact the USACE Vermont Project Office (VPO) with questions at any time (mailing address: 11 Lincoln Street, Room 210, Essex Junction, Vermont 05452; email: cenae-r-vt@usace.army.mil; phone: (802) 872-2893). Pre-application meetings (see 33 CFR 325.1(b)), whether arranged by USACE or requested by applicants, are encouraged to facilitate the review of projects. Pre-application meetings and/or site visits can help streamline the permit process by alerting the applicant to potentially time-consuming concerns that may arise during the evaluation

of a project (e.g., avoidance, minimization and compensatory mitigation requirements, historic properties, and endangered species).

3. Federal and state jurisdiction may differ in some instances. Applicants are responsible for applying for and obtaining all required federal, state or local approvals (see GC 1). A permit from USACE may be required for specific activities regardless of state of Vermont jurisdiction.

These GPs may also be used to authorize projects that are not regulated by the state of Vermont.

4. How to Obtain/Apply for Authorization:

Project proponents must read each GP and the GCs to see if an activity is eligible for authorization.

a. Self-Verification (SV):

May proceed without application or notification to USACE provided the project proponent verifies that the activity will meet the terms and conditions of applicable GPs. Project proponents shall comply with other federal laws such as the National Historic Preservation Act (NHPA), the Endangered Species Act (ESA) and the Wild and Scenic Rivers Act (WSRA). Consultation with outside experts, such as the State Historic Preservation Officer (SHPO), federally-recognized tribes in the state of Vermont (Tribal Historic Preservation Officers, or THPOs), National Park Service (NPS), and the U.S. Fish and Wildlife Service (USFWS) listed in Appendix V may also be necessary. The USACE relies on the VT ANR Environmental Notice Bulletin (ENB) for notification of SV projects, as applicable.

b. Pre-Construction Notification (PCN):

i. For activities that do not qualify for SV, the applicant must submit a PCN to obtain written verification from USACE before starting work in USACE jurisdiction. Digital submissions are encouraged and preferred and can be submitted directly to USACE staff by email, or at cenae-r-vt@usace.army.mil. Applicants must submit at least the following information:

- A completed USACE application form (ENG Form 4345[1]).
- Plans that illustrate the proposed work in reference to the limits of USACE jurisdiction as applicable. Plans should show existing and proposed conditions and contain all other appropriate information.
- Federal wetland delineation documentation (i.e., Wetland Determination Data Forms).
- Any information on federally listed endangered and threatened species and critical habitat that occur or may occur in the project area (See GC 12).
- Any correspondence with the SHPO and THPOs indicating coordination with these entities to ensure compliance with GC 11. Applicants are encouraged to submit a copy of their application materials to the SHPO and the THPOs, at the

[1] Located at www.nae.usace.army.mil/regulatory under "Useful Documents, Forms and Publications."

same time, or before, they apply to USACE to be reviewed for the presence of historic, archaeological or tribal resources in the permit area that the proposed work may affect.

The USACE will coordinate review of all PCN activities with the interagency review team (IRT) comprised of federal and state agencies and federally recognized tribes to ensure that the proposed activity results in no more than a minimal impact to the aquatic environment. This may require project modifications involving avoidance, minimization, and/or compensatory mitigation for unavoidable impacts to ensure the net effects of a project are minimal.

ii. Emergency Situations: Contact USACE immediately in the event of an emergency to obtain information on the verification process and coordination requirements. The USACE regulation at 33 CFR 325.2(e)(4) states that "an "emergency" is a situation which would result in an unacceptable hazard to life, a significant loss of property, or an immediate, unforeseen and significant economic hardship if corrective action requiring a permit is not undertaken within a time period less than the normal time needed to process the application under standard procedures." Emergency work is subject to the same terms and conditions of these GPs as non-emergency work, and similarly, must qualify for authorization under these GPs; otherwise, an individual permit (IP) shall be required. Upon notification, USACE will determine if a project qualifies for emergency procedures under the GPs and whether work may proceed prior to submittal of an application. Where an application is required, USACE staff will work with all applicable agencies to expedite verification according to established procedures in emergency situations.

5. Projects that are not authorized by these GPs require an IP (33 CFR 325.5(b)) and project proponents must submit an application directly to USACE. These GPs do not affect the USACE IP review process or activities exempt from USACE permit requirements. The USACE retains discretionary authority on a case-by-case basis to elevate an SV to PCN or an IP, or a PCN to an IP based on concerns for the aquatic environment or for any other factor of the public interest (33 CFR 320.4(a)). Whenever USACE notifies an applicant that a PCN or IP is required, no work in USACE jurisdiction may be conducted until USACE issues the required authorization in writing indicating that work may proceed. For IPs, an individual 401 WQC or waiver is required from the VT ANR. Contact the VT ANR for procedures on how to apply for a WQC.

SECTION III. GENERAL PERMITS

An activity listed below may be authorized by these GPs only if that activity and the permittee satisfy all of the GP's terms and conditions. Any activity not specifically listed below may still be eligible for the GPs; prospective permittees are advised to contact USACE for specific eligibility determinations.

"Permanent impacts" means WOTUS that are permanently affected by filling, flooding, excavation, drainage or clearing because of the regulated activity. Permanent impacts include permanent discharges of dredged or fill material that change an aquatic area to dry land, increase the bottom elevation of a waterbody, or change the use of a waterbody. Temporary impacts include, but are not limited to, WOTUS that are temporarily filled, flooded, excavated, drained or cleared because of the regulated activity. Temporary

impacts are usually associated with construction activities and often involve the placement of cofferdams and construction mats. These fills are removed when construction is completed. Pilings and associated structures do not ordinarily constitute a discharge of fill material. Impacts resulting from activities eligible for exemptions under §404(f) of the CWA are not considered when calculating the impact area.

Vermont General Permits

1. Aids to navigation
2. Repair or maintenance of existing currently serviceable, authorized or grandfathered structures/fills and removal of structures and fills
3. Moorings
4. Pile-supported structures and floats, including boat lifts/hoists and other miscellaneous structures, temporary recreational structures and work
5. Boat ramps and marine railways
6. Utility line activities
7. Dredging, beach nourishment, rock and debris removal and rock relocation
8. U.S. Coast Guard Approved Bridges
9. Shoreline and bank stabilization projects
10. Aquatic habitat restoration, establishment and enhancement activities
11. Fish and wildlife harvesting activities
12. Oil spill and hazardous material cleanup
13. Cleanup of hazardous and toxic waste
14. Scientific measurement devices
15. Survey activities
16. Energy generation and renewable energy generation facilities and hydropower projects
17. New/expanded developments and recreational facilities
18. Linear transportation projects and stream/wetland crossings
19. Mining activities
20. Temporary fill not associated with any other GP activities
21. Agricultural activities

GP 1. AIDS TO NAVIGATION (Section 10): The placement of aids to navigation and regulatory markers that are approved by and installed in accordance with the requirements of the U.S. Coast Guard (USCG). See 33 CFR 66, Chapter I, subchapter C.	
Self-Verification Eligible	**Pre-Construction Notification Required**
Aids to navigation and regulatory markers approved by and installed in accordance with the requirements of the USCG. Not located within a USACE Federal Navigation Project (FNP).	1. Work not eligible for SV. 2. Aids to navigation and regulatory markers or temporary buoys, markers, floats, and similar structures that are located within a USACE FNP.

GP 2. REPAIR OR MAINTENANCE OF EXISTING CURRENTLY SERVICEABLE, AUTHORIZED OR GRANDFATHERED STRUCTURES/FILLS AND REMOVAL OF STRUCTURES AND FILLS (Sections 10 & 404): (a) Repair, rehabilitation, or replacement of any previously authorized, currently serviceable structure or fill, or of any currently serviceable structure or fill authorized by 33 CFR 330.3 (activities occurring before certain dates), provided that the structure or fill is not to be put to uses differing from those uses specified or contemplated for it in the original permit or the most recently authorized modification. Minor deviations in the structure's configuration or filled area, including those due to changes in materials, construction techniques, requirements of other regulatory agencies, or current construction codes or safety standards that are necessary to make the repair, rehabilitation, or replacement are authorized. Includes removal of structures and fill. **Not authorized under GP 2:** Permanent impacts > 5,000 SF in Lake Champlain, Lake Memphremagog, Wallace Pond and adjacent wetlands, and > 1 acre in all other WOTUS.	
Self-Verification Eligible	**Pre-Construction Notification Required**
1. Repair, replacement in-kind, or maintenance of existing, currently serviceable, authorized structures or fills with no substantial expansion or change in use: - Conditions of the original authorization apply. - Minor deviations in fill design allowed. - The repair, rehabilitation, or replacement of those structures or fills destroyed or damaged by storms, floods, fire or other discrete events is authorized, provided the repair, rehabilitation, or replacement is commenced, or is under contract to commence, within two years of the date of their destruction or damage. In cases of catastrophic events, such as hurricanes or tornadoes, USACE may waive the two-year limit in writing provided the permittee can demonstrate funding, contract, or other similar delays. - Maintenance includes, but it is not limited to, the removal of accumulated sediments and debris in the vicinity of existing structures (such as bridges, culverted road crossings, water intake structures, dams, etc.), provided: (a) removal is the minimum necessary to restore the waterway in the vicinity of the structure to the approximate dimensions that existed when the structure was built; and (b) all dredged or excavated materials are deposited and retained in an upland area. 2. Bulkhead replacement via installation of new bulkhead within 18” of existing bulkhead and backfill. 3. Construction mats of any area necessary to conduct activities that were previously authorized, authorized under SV, or not subject to regulation in all WOTUS. 4. Removal of previously authorized structures or fills and the restoration to pre-construction conditions.	1. Work not eligible for SV. 2. Dam and flood control or levee repair, rehabilitation, or replacement which involves a permanent change in the flood elevation or permanent water surface elevation of the impoundment. 3. The discharge of more than *de minimis* (i.e., inconsequential) quantities of accumulated bottom sediment occurring from or through a dam into downstream waters. **NOTE 1**: Grandfather dates include structures or work completed before December 18, 1968 and fill placed before July 25, 1975 for USACE purposes only. **NOTE 2**: This GP authorizes the repair, rehabilitation, or replacement of any previously authorized structure or fill that does not qualify for the CWA §404(f) exemption for maintenance. See 33 CFR 323.4(a)(2).

GP 3. MOORINGS (Section 10): (a) New private, non-commercial, non-rental, single-boat moorings; (b) Minor relocation of previously authorized moorings; (c) Mooring field expansions, boundary reconfigurations, or modifications of previously authorized mooring fields; and (d) Maintenance and replacement of moorings. **Not authorized under GP 3:** Moorings or moored vessels that extend within the horizontal limits of FNPs and moorings associated with a new boating facility.	
Self-Verification Eligible	**Pre-Construction Notification Required**
1. Private, non-commercial, non-rental, single-boat moorings. 2. Minor relocation of previously authorized moorings.	1. Work not eligible for SV. 2. New moorings associated with an existing boating facility.

GP 4. PILE-SUPPORTED STRUCTURES AND FLOATS, INCLUDING BOAT LIFTS/HOISTS AND OTHER MISCELLANEOUS STRUCTURES, TEMPORARY RECREATIONAL STRUCTURES AND WORK (Section 10): (a) New, expansions, reconfigurations, or modifications of structures for navigation access including docks, decks, floats, stairs, and boat/float lifts; and (b) Temporary buoys, markers, and similar structures placed for recreational use during specific events such as water skiing competitions and boat races or seasonal use. **Not authorized under GP 4:** (a) Fill or excavation; (b) Structures within FNPs; or (c) Structures associated with a new boating facility.	
Self-Verification Eligible	**Pre-Construction Notification Required**
1. Reconfiguration of existing authorized docks with no additional slips and no expansion, provided those structures do not extend beyond the existing perimeter of the facility. 2. Seasonal private, residential pile-supported or float-supported structures for navigational access extending no further waterward than 50 feet beyond mean high water (MHW), not >6 feet wide, and a cumulative dock deck area <500 SF, and not located within 25 feet of the property line. 3. Private, bottom-anchored seasonal swim floats that are <400 SF in size. 4. Private boat and float lifts. 5. Temporary buoys, markers, and similar structures: (a) placed for recreational use during specific events, provided that such structures are removed within 30 days after use has been discontinued and/or; (b) placed during winter events on ice and removed before spring thaw. Provided the above do not extend across >25% of the waterway width at mean low water (MLW).	1. Work not eligible for SV. 2. Piers, docks, decks, floats, and similar structures that provide public, community or government recreational uses such as boating, fishing, swimming, access, etc. 3. Structures or work in or affecting navigable WOTUS that are not defined under any other GP activity. 4. New structures within an existing boating facility, provided those structures do not extend beyond the existing perimeter of the boating facility. 5. Temporary buoys, markers, and similar structures that will not be removed within 30 days after use has been discontinued. 6. Cordoning off portions of public waters (e.g., swim areas). **NOTE:** The USACE may require a letter of no objection from the abutter if a structure is to be located within 25 feet of the property line.

GP 5. BOAT RAMPS AND MARINE RAILWAYS (Sections 10 and 404): Activities required for the construction of boat ramps and marine railways including excavation and fill. **Not authorized under GP 5:** (a) Permanent impacts ≥ 5,000 SF in Lake Champlain, Lake Memphremagog and Wallace Pond and adjacent wetlands, and > 1 acre in all other WOTUS; (b) Temporary impacts > 1 acre in WOTUS; or (c) dredging in navigable WOTUS. (see GP 7).	
Self-Verification Eligible	**Pre-Construction Notification Required**
1. < 5,000 SF of permanent and temporary impacts in waterways and/or wetlands other than Lake Champlain, Lake Memphremagog, Wallace Pond and adjacent wetlands.	1. Work not eligible for SV. 2. < 5000 SF permanent impact and < 1 acre of temporary impact and excavation in Lake Champlain, Lake Memphremagog and Wallace Pond and adjacent wetlands. 3. Permanent and temporary impacts ≥ 5,000 SF and < 1 acre in waterways and/or wetlands, other than Lake Champlain, Lake Memphremagog, Wallace Pond and adjacent wetlands. **NOTE**: The USACE may require a letter of no objection from the abutter if a structure is to be located within 25 feet of the property line.

<table>
<tr><td colspan="2">GP 6. UTILITY LINE ACTIVITIES (Sections 10 & 404): Activities required for (a) The construction, maintenance, relocation, repair, and removal of utility lines, including outfall and intake structures, and the associated excavation, backfill, or bedding for utility lines; (b) The construction, maintenance or expansion of utility line substation facilities associated with a power/utility line in WOTUS; and (c) The construction and maintenance of foundations for overhead utility line towers, poles, and anchors, provided the foundations are the minimum size necessary, and separate footings for each tower leg (rather than a larger single pad) are used where feasible. This GP authorizes the construction of access roads to facilitate construction of the above activities, provided the activity, in combination with all other activities included in one single and complete project, does not cause the permanent loss of greater than 1 acre of WOTUS. Impacts resulting from mechanized pushing, dragging or other similar activities that redeposit excavated soil material shall be figured into the area limit determination.

Not authorized under GP 6: Permanent and temporary impacts ≥ 5,000 SF in Lake Champlain, Lake Memphremagog, Wallace Pond and adjacent wetlands, and > 1 acre in all other WOTUS.</td></tr>
<tr><th>Self-Verification Eligible</th><th>Pre-Construction Notification Required</th></tr>
<tr><td>1. < 5,000 SF of permanent and temporary impacts in waterways and/or wetlands other than Lake Champlain, Lake Memphremagog, Wallace Pond and adjacent wetlands.

2. Intake structures that are dry hydrants used exclusively for firefighting activities with no stream impoundments.

3. Seasonal waterlines installed on the lake or river bottom that are ≤ 2 inches in diameter.</td><td>1. Work not eligible for SV.

2. Overhead utility lines constructed over navigable WOTUS and submarine utility lines that are routed in or under such waters.

3. Permanent and temporary impacts are:
a. < 5,000 SF in Lake Champlain, Lake Memphremagog, Wallace Pond and adjacent wetlands.
b. ≥ 5,000 SF and < 1 acre in waterways and/or wetlands other than Lake Champlain, Lake Memphremagog, Wallace Pond and adjacent wetlands.

4. Work involves stream channelization, relocation or loss of streambed including impoundments.

NOTE: Utility lines consisting of aerial electric power transmission lines crossing navigable WOTUS must comply with the applicable minimum clearances specified in 33 CFR 322.5(i).</td></tr>
<tr><td colspan="2">NOTE: A utility line is defined as any pipe or pipeline for the transportation of any gaseous, liquid, liquescent, or slurry substance, for any purpose, and any cable, line, or wire for the transmission for any purpose of electrical energy, telephone, data, and telegraph messages, and radio and television communication. The term utility line does not include activities that drain a water of the U.S., such as drainage tile or French drains, but it does apply to pipes conveying drainage from another area.
NOTE: Construction mats of any area necessary to conduct activities do not count towards the SV and PCN thresholds and should be removed as soon as work is completed.</td></tr>
</table>

GP 7. DREDGING (Section 10), BEACH NOURISHMENT, (Sections 10 & 404); ROCK AND DEBRIS REMOVAL (Section 10) AND ROCK RELOCATION (Sections 10 & 404): (a) New and maintenance dredging, including disposal of dredged material for beach nourishment, provided USACE finds the dredged material to be suitable for such disposal; (b) Beach nourishment not associated with dredging; and (c) Rock removal and relocation for navigation. **Not authorized under GP 7:** (a) New and maintenance dredging ≥ 5,000 CY; (b) Permanent fill ≥ 5,000 SF in Lake Champlain, Lake Memphremagog, Wallace Pond and adjacent wetlands, and > 1 acre in all other WOTUS; (c) Regulated discharges associated with excavation, and disposal > 1/2 acre; and (d) Temporary fill > 1 acre in all WOTUS.	
Self-Verification Eligible	**Pre-Construction Notification Required**
1. No new or maintenance dredging in navigable WOTUS. 2. < 5,000 SF of temporary impact associated with dredging in waterways and/or wetlands. 3. ≤ 200 SF of impact associated with rock removal and relocation. 4. Removal of debris (e.g. woody and plant material deposited after a storm event) in navigable WOTUS.	1. Work not eligible for SV. 2. New and maintenance dredging up to 5,000 CY with upland disposal or beach nourishment in navigable WOTUS. 3. ≥ 5,000 SF and < 1 acre of temporary impact associated with dredging in all waterways and/or wetlands. 4. Disposal of dredged material for beach nourishment: a. < 5,000 SF in Lake Champlain, Lake Memphremagog, Wallace Pond and adjacent wetlands. b. ≥ 5,000 SF and < 1 acre in waterways and/or wetlands other than Lake Champlain, Lake Memphremagog, Wallace Pond and adjacent wetlands.

GP 8. U.S. COAST GUARD APPROVED BRIDGES (Section 10 & 404; navigable WOTUS): Discharges of dredged or fill material incidental to the construction and modification of bridges across navigable WOTUS, including cofferdams, abutments, foundation seals, piers, and temporary construction and access fills provided that the USCG authorizes the construction of the bridge structure under Section 9 of the Rivers and Harbors Act of 1899 or other applicable laws. A USCG Authorization Act Exemption or a STURRA (144h) exemption do not constitute USCG authorization (see GP 18). **Not authorized under GP 8:** Causeways and approach fills (see GP 18)	
Self-Verification Eligible	**Pre-Construction Notification Required**
Discharges of dredged or fill material incidental to the construction and modification of bridges.	

GP 9. SHORELINE AND BANK STABILIZATION PROJECTS (Sections 10 & 404): Bank stabilization activities necessary for erosion protection along the banks of lakes, ponds, streams, and any other open waters. Includes bulkheads, seawalls, riprap, revetments or slope protection and similar structures, as well as vegetative planting, soil bioengineering, or alternative techniques that are a combination of the two (e.g. living shorelines), specifically for the purpose of shoreline protection. **Not authorized under GP 9:** (a) Bank stabilization ≥ 500 LF in total length and/or involving more than an average of 1 CY of fill per linear foot placed below the plane of the ordinary high water mark (OHWM) in Lake Champlain, Lake Memphremagog and Wallace Pond and adjacent wetlands; (b) Stream channelization or relocation activities; or (c) breakwaters, groins and jetties.	
Self-Verification Eligible	**Pre-Construction Notification Required**
1. No fill in Lake Champlain, Lake Memphremagog, Wallace Pond and adjacent wetlands. 2. Bank stabilization < 200 linear feet long and does not exceed an average of 1 CY of fill per linear foot placed below the plane of OHWM in WOTUS other than Lake Champlain, Lake Memphremagog, Wallace Pond and adjacent wetlands. 3. < 5,000 SF of temporary fill associated with bank stabilization in waterways and/or wetlands, other than Lake Champlain, Lake Memphremagog, Wallace Pond and adjacent wetlands.	1. Work not eligible for SV. 2. Bank stabilization <500 linear feet and an average of < 1 CY of fill per linear foot placed below the plane of OHWM in Lake Champlain, Lake Memphremagog, Wallace Pond and adjacent wetlands.

GP 10. AQUATIC HABITAT RESTORATION, ESTABLISHMENT AND ENHANCEMENT ACTIVITIES (Sections 10 and 404): Activities in waters of the United States associated with the restoration, enhancement, and establishment of wetlands and riparian areas; the restoration and enhancement of streams and other open waters; the relocation of non-navigable WOTUS, including streams and associated wetlands for reestablishment of a natural stream morphology and reconnection of the floodplain; and the restoration and enhancement of shellfish, finfish and wildlife, provided those activities result in net increases in aquatic resource functions and services. **Not authorized under GP 10:** Stream channelization activities.	
Self-Verification Eligible	**Pre-Construction Notification Required**
1. No fill in Lake Champlain, Lake Memphremagog, Wallace Pond and adjacent wetlands. 2. Permanent and temporary impacts are < 5,000 SF in waterways and/or wetlands. 3. The activity does not convert a stream to wetland or vice versa, or wetland to a pond or uplands. 4. Temporary structures in navigable WOTUS not exceeding 30 days.	1. Work not eligible for SV. 2. Permanent or temporary impacts are: a. In Lake Champlain, Lake Memphremagog, Wallace Pond, adjacent wetlands; or b. ≥ 5,000 SF in all other waterways and/or wetlands. 3. Permanent structures in navigable WOTUS. 4. Sea Lamprey control projects. 5. Water impoundments. 6. Dam removals. 7. Restoration, establishment and/or enhancement activities approved for use by a USACE-approved in-lieu fee program or USACE-approved mitigation bank, with impacts of any size.

GP 11. FISH AND WILDLIFE HARVESTING ACTIVITIES (Sections 10 and 404): Activities in waters of the United States associated with fish and wildlife harvesting devices, such as duck blinds, fish shanties, and small fish aggregating and attraction devices. **Not authorized by GP 11:** (a) Artificial reefs; and (b) Permanent and temporary fill > 5,000 SF in all waterways and/or wetlands.	
Self-Verification Eligible	**Pre-Construction Notification Required**
Non-fill activities associated with fish and wildlife harvesting devices including duck blinds, fish shanties and small fish aggregating and attraction devices in navigable waters.	1. Work not eligible for SV. 2. Permanent and temporary impacts < 5,000 SF in all waterways and/or wetlands.

GP 12. OIL SPILL AND HAZARDOUS MATERIAL CLEANUP (Sections 10 and 404): (a) Activities conducted in response to a discharge or release of oil and hazardous substances that are subject to the National Oil and Hazardous Substances Pollution Contingency Plan (40 CFR 300) including containment, cleanup, and mitigation efforts, provided activities are done under either (i) The Spill Prevent, Control and Countermeasure Plan required by 40 CFR 112.3; (ii) The direction or oversight of the Federal on-site coordinator designated by 40 CFR 300; or (iii) Any approved existing state, regional or local contingency plan, provided that the Regional Response Team concurs with the proposed response efforts or does not object to the response effort; (b) Activities required for the cleanup of oil releases in WOTUS from electrical equipment that are governed by EPA's polychlorinated biphenyl (PCB) spill response regulations at 40 CFR 761; (c) Booms placed in navigable WOTUS; and (d) Use of structures and fills for spill response training exercises. Special Aquatic Sites (SAS) must be restored to their original condition and elevation	
Self-Verification Eligible	**Pre-Construction Notification Required**
1. Activities that are conducted in accordance with (a) or (b) above. 2. Booms placed in navigable WOTUS for hazardous and toxic waste containment, absorption and prevention, provided they are removed upon completion of the cleanup. 3. Temporary impacts for spill response training exercises < 1000 SF in navigable WOTUS and < 5000 SF in all other WOTUS, and in place ≤ 30 days.	1. Work not eligible for SV. 2. Permanent structures or impacts for spill response training exercises.

GP 13. CLEANUP OF HAZARDOUS AND TOXIC WASTE (Sections 10 and 404): Specific activities to effect the containment, stabilization or removal of hazardous or toxic waste materials, including court ordered remedial action plans or related settlements which are performed, ordered or sponsored by a government agency with established legal or regulatory authority. SAS must be restored to their original condition and elevation. **Not authorized under GP 13:** (a) the establishment of new disposal sites; or (b) the expansion of existing sites used for the disposal of hazardous or toxic waste.	
Self-Verification (SV) Eligible	**Pre-Construction Notification Required**
1. Permanent and temporary impacts are < 5,000 SF in WOTUS. 2. No fill in navigable WOTUS. 3. Booms placed in navigable WOTUS for oil and hazardous substance containment, absorption and prevention, provided they are removed upon completion of the cleanup.	1. Work not eligible for SV. 2. Permanent and temporary impacts: a. ≥ 5,000 SF in all WOTUS; or b. Located in navigable WOTUS. 3. Work involves stream channelization, relocation, impoundments or loss of streambed.

GP 14. SCIENTIFIC MEASUREMENT DEVICES (Sections 10 and 404): Scientific devices for measuring and recording scientific data, such as staff gauges, tide and current gauges, meteorological stations, water recording and biological observation devices, water quality testing and improvement devices, and similar structures. Also eligible are small temporary weirs and flumes constructed primarily to record water quantity and velocity, provided the discharge is < 25 CY. **Not authorized under GP 14:** (a) Permanent and temporary impacts > 1/2 acre in navigable WOTUS; and (b) Permanent and temporary impacts > 1 acre in all other WOTUS.	
Self-Verification Eligible	**Pre-Construction Notification Required**
1. Permanent and temporary impacts are ≤ 1,000 SF in WOTUS. 2. Temporary structures in navigable WOTUS. Provided the activity does not: • Restrict or concentrate movement of aquatic organisms; • Result in a hazard to navigation.	1. Work not eligible for SV. 2. Permanent and temporary impacts > 1000 SF in WOTUS. 3. Permanent structures in navigable WOTUS. 4. The activity involves permanent biological sampling devices in non-navigable WOTUS, temporary or permanent biological sampling devices in navigable WOTUS, or weirs and flumes.
NOTE: Upon completion of the use of the device to measure and record scientific data, the measuring device, and any other structures or fills associated with that device (e.g., foundations, anchors, buoys, lines, etc.), must be removed to the maximum extent practicable.	

GP 15. SURVEY ACTIVITIES (Sections 10 and 404): Survey activities such as soil borings, core sampling, seismic exploratory operations, plugging of seismic shot holes, and other exploratory-type bore holes, exploratory trenching and historic resources surveys. **Not authorized under GP 15:** (a) Permanent impacts > 5,000 SF in Lake Champlain, Lake Memphremagog and Wallace Pond, and > 1 acre in all other waterways and/or wetlands, (b) Temporary impacts > 1 acre in all WOTUS, excluding temporary mats.	
Self-Verification Eligible	**Pre-Construction Notification Required**
1. No fill in Lake Champlain, Lake Memphremagog and Wallace Pond. 2. < 5,000 SF of permanent and temporary impacts in waterways and/or wetlands other than Lake Champlain, Lake Memphremagog and Wallace Pond. 3. No impacts, other than soil borings or core sampling, in navigable WOTUS. 4. No permanent structures or drilling and discharge of excavated material from test wells for oil and gas exploration allowed.	1. Work not eligible for SV. 2. < 5000 SF permanent impact and < 1 acre of temporary impact in Lake Champlain, Lake Memphremagog and Wallace Pond and adjacent wetlands. 3. Permanent and temporary impacts are ≥ 5,000 SF and < 1 acre of impact in waterways and/or wetlands, other than Lake Champlain, Lake Memphremagog, Wallace Pond and adjacent wetlands.
NOTE: The area in which the exploratory trench is dug must be restored to its preconstruction elevation upon completion of the work and must not drain a water of the United States. In wetlands, the top 6 to 12 inches of the trench should normally be backfilled with topsoil from the trench. **NOTE**: Construction mats of any area necessary to conduct activities do not count towards the SV and PCN thresholds and should be removed as soon as work is completed.	

GP 16. ENERGY GENERATION AND RENEWABLE ENERGY GENERATION FACILITIES AND HYDROPOWER PROJECTS (Sections 10 and 404): Structures and work in navigable WOTUS and discharges of dredged or fill material into WOTUS for the construction, expansion, modification or removal of: (a) land-based renewable energy production facilities, including attendant features; (b) water-based wind production facilities or hydrokinetic renewable energy generation projects and their attendant features; and (c) discharges of dredged or fill material associated with hydropower projects.

Attendant features may include, but are not limited to, land-based collection and distribution facilities, control facilities, and parking lots. For each single and complete project in (b) above, no more than 10 generation units (e.g., wind turbines or hydrokinetic devices) are authorized in navigable WOTUS.

Not authorized under GP 16: Permanent and temporary impacts that are (a) > 1 acre in non-navigable WOTUS; (b) > 5,000 SF in navigable WOTUS; and (c) > 5,000 SF in wetlands adjacent to Lake Champlain, Lake Memphremagog, and Wallace Pond.

Self-Verification Eligible	**Pre-Construction Notification Required**
For land-based facilities: 1. < 5,000 SF of permanent and temporary impacts in non-navigable WOTUS.	1. Work not eligible for SV. 2. Permanent and temporary impacts are: a. ≥ 5000 SF and < 1 acre in non-navigable WOTUS, and b. < 5000 SF in navigable WOTUS. 3. Work involves stream channelization, relocation or loss of streambed including impoundments.

NOTE: Utility lines constructed to transfer the energy from the land-based renewable generation or collection facility to a distribution system, regional grid, or other facility may be authorized by GP 6.
NOTE: Construction mats of any area necessary to conduct activities do not count towards the SV and PCN thresholds and should be removed as soon as work is completed.

GP 17. NEW/EXPANDED DEVELOPMENT AND RECREATIONAL FACILITIES (Sections 10 and 404): Discharges of dredged or fill material for the construction or expansion of developments and/or recreational facilities. This GP authorizes attendant features that are necessary for the use of the development. Attendant features may include but are not limited to roads, parking lots, garages, yards, utility lines, storm water management facilities, and septic fields. Fill area includes all temporary and permanent fill, and regulated discharges associated with excavation. **Not authorized under GP 17:** Permanent and temporary impacts > 5,000 SF in Lake Champlain, Lake Memphremagog, Wallace Pond and adjacent wetlands, and > 1 acre in all other waterways and/or wetlands.	
Self-Verification Eligible	**Pre-Construction Notification Required**
1. < 5,000 SF of permanent and temporary impacts in waterways and/or wetlands other than Lake Champlain, Lake Memphremagog and Wallace Pond and adjacent wetlands.	1. Work not eligible for SV. 2. Permanent and temporary impacts are: a. < 5,000 SF in Lake Champlain, Lake Memphremagog, Wallace Pond and adjacent wetlands. b. ≥ 5,000 SF and < 1 acre in waterways and/or wetlands other than Lake Champlain, Lake Memphremagog, Wallace Pond and adjacent wetlands. 3. Work involves stream channelization, relocation, or loss of streambed, including impoundments.
NOTE: Construction mats of any area necessary to conduct activities do not count towards the SV and PCN thresholds and should be removed as soon as work is completed.	

<table>
<tr><td colspan="2">GP 18. LINEAR TRANSPORTATION PROJECTS AND STREAM/WETLAND CROSSINGS (Sections 10 & 404): Activities required for the construction, expansion, modification, or improvement of linear transportation projects (e.g., driveways, roads, highways, railways, trails, airport runways, and taxiways), and attendant features. Any stream channel modification is limited to the minimum necessary to construct or protect the linear transportation project; such modifications must be in the immediate vicinity of the project.

Not authorized under GP 18: Permanent and temporary impacts > 5,000 SF in Lake Champlain, Lake Memphremagog, Wallace Pond and adjacent wetlands, and > 1 acre in all other waterways and/or wetlands.</td></tr>
<tr><th>Self-Verification Eligible</th><th>Pre-Construction Notification Required</th></tr>
<tr><td>1. < 5,000 SF of permanent and temporary impacts in waterways and/or wetlands other than Lake Champlain, Lake Memphremagog and Wallace Pond and adjacent wetlands.

2. Permanent and temporary stream crossings that comply with GC 20.

3. Existing crossings (e.g., culverts, elliptical or arch pipes, etc.) are not modified by (a) decreasing the diameter of the crossing or (b) changing the friction coefficient, such as through sliplining (retrofitting an existing culvert by inserting a smaller diameter pipe), culvert relining or invert lining.</td><td>1. Work not eligible for SV.

2. Permanent and temporary impacts are:
a. < 5,000 SF in Lake Champlain, Lake Memphremagog, Wallace Pond and adjacent wetlands.

b. ≥ 5,000 SF and < 1 acre in waterways and/or wetlands other than Lake Champlain, Lake Memphremagog, Wallace Pond and adjacent wetlands.

3. Work involves stream channelization, relocation or loss of streambed including impoundments.

NOTE: Time of year for instream work is not limited for PCN authorizations unless specifically required by special conditions.</td></tr>
<tr><td colspan="2">NOTE: Non-linear features commonly associated with transportation projects, such as vehicle maintenance or storage buildings, parking lots, train stations, or aircraft hangars may be authorized by GP 17.
NOTE: Construction mats of any area necessary to conduct activities do not count towards the SV and PCN thresholds and should be removed as soon as work is completed.</td></tr>
</table>

GP 19. MINING ACTIVITIES (Sections 10 and 404): Discharges of dredged or fill material into WOTUS for mining activities. **Not authorized under GP 16:** Permanent and temporary impacts > 5,000 SF in Lake Champlain, Lake Memphremagog, Wallace Pond and adjacent wetlands, and > 1 acre in all other waterways and/or wetlands.	
Self-Verification Eligible	**Pre-Construction Notification Required**
1. The activity does not occur in, over, or under navigable WOTUS. 2. < 5,000 SF of permanent and temporary impacts in waterways and/or wetlands other than Lake Champlain, Lake Memphremagog, Wallace Pond and adjacent wetlands.	1. Work not eligible for SV. 2. Permanent and temporary impacts are: a. < 5,000 SF in Lake Champlain, Lake Memphremagog, Wallace Pond and adjacent wetlands. b. ≥ 5,000 SF and < 1 acre in waterways and/or wetlands other than Lake Champlain, Lake Memphremagog, Wallace Pond and adjacent wetlands. 3. Work occurs in a navigable WOTUS. 4. Work involves stream channelization, relocation, impoundment, loss of streambed, or discharge of tailings into streams.

GP 20. TEMPORARY FILL NOT ASSOCIATED WITH ANY OTHER GP ACTIVITIES (Sections 10 and 404): Temporary structures, work, and discharges, including cofferdams, necessary for construction activities or access fills or dewatering of construction sites that are not authorized under another GP activity. **Not authorized under GP 20:** (a) Permanent structures or impacts; (b) Temporary impacts > 1 acre in WOTUS; (c) use of cofferdams to dewater wetlands or other aquatic areas to change their use; or (d) Structures or fill left in place after construction is completed.	
Self-Verification Eligible	**Pre-Construction Notification Required**
1. Temporary impacts including land clearing in WOTUS are ≤ 5000 SF.	1. Work not eligible for SV.
NOTE: Temporary stream crossings may be authorized under GP 18. **NOTE**: Construction mats of any area necessary to conduct activities do not count towards the SV and PCN thresholds and should be removed as soon as work is completed.	

GP 21. AGRICULTURAL ACTIVITIES (Section 404): Discharges of dredged or fill material into WOTUS for agricultural activities, including the construction of building pads for farm buildings. Authorized activities include: (a) installation, placement, or construction of drainage tiles, ditches, or levees; mechanized land clearing; land leveling; the relocation of existing serviceable drainage ditches; and similar activities; (b) discharges of dredged or fill material to relocate existing serviceable drainage ditches constructed in streams. **Not authorized under GP 21:** (a) Permanent impacts > 1 acre in non-navigable WOTUS; (b) Work in navigable WOTUS; or (c) Construction of farm ponds in perennial streams.	
Self-Verification Eligible	**Pre-Construction Notification Required**
1. For those activities subject to USACE jurisdiction, < 5,000 SF of permanent and temporary impacts.	1. ≥ 5,000 SF to < 1 acre of permanent and temporary impacts. 2. Work involves stream channelization, relocation or loss of streambed including impoundments.

SECTION IV. GENERAL CONDITIONS

1. Other Permits. Permittees shall obtain other federal, state, or local authorizations as required by law. Permittees are responsible for applying for and obtaining all required state or local approvals. Work that is not regulated by the state of Vermont, but is subject to USACE jurisdiction, may be eligible for these General Permits (GPs).

2. Federal Jurisdictional Boundaries.

a. Applicability of these GPs shall be evaluated with reference to federal jurisdictional boundaries. Activities shall be evaluated with reference to "WOTUS" under the Clean Water Act (33 CFR 328) and "navigable WOTUS" under §10 of the Rivers and Harbors Act of 1899 (33 CFR 329). Applicants are responsible for ensuring that the boundaries used satisfy the federal criteria defined at 33 CFR 328-329. These sections prescribe the policy, practice and procedures to be used in determining the extent of USACE jurisdiction. Note: WOTUS includes all waters pursuant to 33 CFR 328.3(a), and adjacent wetlands as that term is defined in 33 CFR 328.3(c).

b. Applicants shall identify all aquatic resources on the project site. All aquatic resources are presumed to be WOTUS unless an approved jurisdictional determination has been obtained from USACE that determines otherwise. Wetlands shall be delineated in accordance with the Corps of Engineers Wetlands Delineation Manual and the most recent Northcentral/Northeast Regional Supplement.

3. Mitigation (Avoidance, Minimization, and Compensatory Mitigation).

a. Activities shall be designed and constructed to avoid and minimize direct, indirect, secondary, and cumulative adverse effects, both temporary and permanent, to WOTUS to the maximum extent practicable at the project site (i.e., on site). Consideration of mitigation (avoiding, minimizing, rectifying, reducing, or compensating) is required to the extent necessary to ensure that the adverse effects to the aquatic environment are no more than minimal.

b. Applicants should consider riparian/forested buffers for stormwater management and low impact development (LID) best management practices (BMPs) to reduce impervious cover and manage stormwater to minimize impacts to the maximum extent practicable.

c. Compensatory mitigation[1] for effects to WOTUS, including direct, secondary and temporal[2], may be required for projects with permanent and temporary impacts that exceed the SV area limits to offset unavoidable impacts, which remain after all appropriate and practicable avoidance and minimization has been achieved, and to ensure that the adverse effects to the aquatic environment are no more than minimal. Proactive restoration projects or temporary impact work with no secondary effects may generally be excluded from this requirement.

d. Mitigation proposals shall follow the guidelines found in the Compensatory Mitigation for Losses of Aquatic Resources; Final Rule April 10, 2008; 33 CFR 332. Permittees considering the use of a monetary payment in-lieu of permittee-responsible mitigation as compensation for unavoidable impacts to WOTUS in the state of Vermont may utilize the Vermont In-Lieu Fee Program.

---

[1] Compensatory mitigation projects provided to offset losses of aquatic resources must comply with the applicable provisions of 33 CFR 332. Also reference the New England District Compensatory Mitigation Guidance at http://www.nae.usace.army.mil/Missions/Regulatory/Mitigation.aspx.

[2] Temporal loss: The time lag between the losses of aquatic resource functions caused by the permitted impacts and the replacement of aquatic resource functions at the compensatory mitigation site(s) (33 CFR 332.2).

e. Mitigation will likely be required for fills >5,000 SF. Information is provided at https://www.nae.usace.army.mil/Missions/Regulatory/Mitigation/.

4. Discretionary Authority. Notwithstanding compliance with the terms and conditions of this permit, USACE retains discretionary authority to require an IP review based on concerns for the aquatic environment or for any other factor of the public interest (33 CFR 320.4(a)). This authority is invoked on a case-by-case basis whenever USACE determines that the potential consequences of the proposal warrant IP review based on the concerns stated above. This authority may be invoked for projects with cumulative adverse environmental effects that are more than minimal, or if there is a special resource or concern associated with a particular project. Whenever USACE notifies an applicant that an IP may be required, authorization under these GPs is voided and no work may be conducted until a USACE IP is obtained or until USACE notifies the applicant that further review has demonstrated that the work may be reviewed under these GPs.

5. Fills Within 100-Year Floodplains. The activity shall comply with applicable Federal Emergency Management Agency (FEMA)-approved state of Vermont or municipal floodplain management requirements. Permittees should contact FEMA and/or the state of Vermont Floodplain Management Program regarding floodplain management requirements (see Section V for Federal and state-specific contact info).

6. Single and Complete Project. The term "single and complete project" is defined at 33 CFR 330.2(i) as the total project proposed or accomplished by one owner/developer or partnership or other association of owners/developers. The GPs shall not be used for piecemeal work and shall be applied to single and complete projects.

a. For non-linear projects, a single and complete project must have independent utility. Portions of a multi-phase project that depend upon other phases of the project do not have independent utility. Phases of a project that would be constructed even if the other phases were not built can be considered as separate single and complete projects with independent utility.

b. Unless USACE determines the activity has independent utility, all components of a single project and/or all planned phases of a multi-phased project (e.g., subdivisions should include all work such as roads, utilities, and lot development) shall be treated together as constituting one single and complete project.

c. For linear projects such as power lines or pipelines with multiple crossings, a "single and complete project" is all crossings of a single water of the U.S. (i.e. single waterbody) at a specific location. For linear projects crossing a single waterbody several times at separate and distant locations, each crossing is considered a single and complete project. However, individual channels in a braided stream or river, or individual arms of a large, irregularly-shaped wetland or lake, etc., are not separate waterbodies, and crossings of such features cannot be considered separately. If any crossing requires a PCN review or an IP review, then the entire linear project shall be reviewed as one project under PCN or the IP procedures.

7. Use of Multiple General Permits. The use of more than one GP for a single and complete project is prohibited, except when the acreage loss of WOTUS authorized by the GPs does not exceed the acreage limit of the GPs with the highest specified acreage limit. For example, if a road crossing over waters is constructed under GP 18, with an associated utility line crossing authorized by GP 6, if the maximum acreage loss of WOTUS for the total project is ≥1 acre it shall be evaluated as an IP.

8. USACE Property and Federal Projects.

a. Corps projects and property can be found at:*www.nae.usace.army.mil/Missions/Civil-Works* *and* *www.nan.usace.army.mil/missions/civil-works*

b. In addition to any authorization under these GPs, proponents must contact the USACE Real Estate Division at (978) 318-8585 for work occurring on or potentially affecting USACE properties and/or USACE-controlled easements to initiate reviews and determine what real estate instruments are necessary to perform work. Permittees may not commence work on USACE properties and/or USACE-controlled easements until they have received any required USACE real estate documents evidencing site-specific permission to work.

c. Any proposed temporary or permanent modification or use of a Federal project (including but not limited to a levee, dike, floodwall, channel, anchorage, seawall, bulkhead, jetty, wharf, pier or other work built but not necessarily owned by the United States), or any use which would obstruct or impair the usefulness of the Federal project in any manner, and/or would involve changes to the authorized Federal project's scope, purpose, and/or functioning, is not eligible for SV and will also require review and approval by USACE pursuant to Section 14 of the Rivers and Harbors Act of 1899 (33 USC 408) (Section 408).

d. A PCN is required for all work in, over, under, or within a distance of three times the authorized depth of a USACE FNP and may also require permission under Section 408.

e. Any structure or work that extends closer than a distance of three times the project's authorized depth to the horizontal limits of any FNP shall be subject to removal at the owner's expense prior to any future USACE dredging or the performance of periodic hydrographic surveys.

f. Where a Section 408 permission is required, written verification for the PCN will not be issued prior to the decision on the Section 408 permission request.

9. National Lands. Activities that impinge upon the value of any National Wildlife Refuge, National Forest, or any area administered by the NPS, USFWS or U.S. Forest Service (USFS) are not eligible for SV and require either a PCN or IP.

10. Wild and Scenic Rivers.

a. The following activities in designated rivers of the National Wild and Scenic River (WSR System, or in a river designated by Congress as a "study river" for possible inclusion in the system, require a PCN unless the NPS has determined in writing to the proponent that the proposed work will not adversely affect the WSR designation or study status:

i. Activities that occur in WSR segments, in and 0.25 miles up or downstream of WSR segments, or in tributaries within 0.25 miles of WSR segments;

ii. Activities that occur in wetlands within 0.25 miles of WSR segments;

iii. Activities that have the potential to alter free-flowing characteristics in WSR segments.

b. As of December 19, 2014, affected rivers in Vermont include: the Missisquoi River, from its headwaters at the Lowell/Westfield town line to the Canadian border in Troy (20.5 miles) and from the Canadian border in East Richford to Enosburgh Falls (14.6 miles); and the Trout River.

11. Historic Properties.

a. No undertaking shall cause effects (defined at 33 CFR 325 Appendix C and 36 CFR 800) on properties listed on, determined to be eligible for listing on, or potentially eligible for listing on

the National Register of Historic Places[3], including previously unknown historic properties within the permit area, unless USACE or another Federal action agency has satisfied the consultation requirements of Section 106 of the National Historic Preservation Act (NHPA). The SHPO, THPO and the National Register of Historic Places can assist with locating information on: i) previously identified historic properties; and ii) areas with potential for the presence of historic resources, which may require identification and evaluation by qualified historic preservation and/or archaeological consultants in consultation with USACE and the SHPO and/or THPO(s).

b. For activities eligible for SV, proponents must ensure and document that the activity will not cause effects as stated in 11(a).

c. Permittees must submit a PCN to USACE as soon as possible if the authorized activity may cause effects as stated in 11(a) to ensure that USACE is aware of any potential effects of the permitted activity on any historic property or cultural resource so that the consultation requirements of Section 106 of NHPA can be satisfied.

d. If a project proponent discovers any previously unknown historic, cultural, or archeological remains or artifacts while accomplishing the activity authorized by this permit, they must immediately notify the District Engineer of what they have found, and to the maximum extent practicable, avoid construction activities that may affect the remains and artifacts until the required coordination has been completed. The District Engineer will initiate the Federal, Tribal and state coordination required to determine if the items or remains warrant a recovery effort or if the site is eligible for listing in the National Register of Historic Places.

e. Federal agencies should follow their own procedures for complying with the requirements of Section 106 NHPA. Along with the application, Federal applicants shall provide USACE with the appropriate documentation to demonstrate compliance with those requirements.

f. Federal and non-federal applicants should coordinate with USACE before conducting any onsite archeological work (reconnaissance, surveys, recovery, etc.) requested by the SHPO or the THPO, as USACE will determine the permit area for the consideration of historic properties based on 33 CFR 325 Appendix C. This is to ensure that work done is in accordance with USACE requirements.

12. Federal Threatened and Endangered Species.

a. No activity is authorized under any GP which: i) is likely to directly or indirectly jeopardize the continued existence of a threatened or endangered species or a species proposed for such designation, as identified under the Federal Endangered Species Act (ESA), or which will directly or indirectly destroy or adversely modify the critical habitat of such species; or ii) “may affect” a listed species or critical habitat, unless ESA section 7 consultation addressing the effects of the proposed activity has been completed; or iii) is “likely to adversely affect” a listed species or critical habitat unless Section 7 consultation has been completed by USACE or another lead action agency in coordination with USACE; or iii) violates the ESA.

b. All prospective permittees shall obtain an Official Species List from the USFWS’s Information for Planning and Consultation (IPAC) found at: https://ecos.fws.gov/ipac/. This is applicable to SV eligible and PCN activities.

c. Non-federal permittees must submit a PCN if any listed species or designated critical habitat might be affected or is in the vicinity of the activity, or if the activity is located in designated critical habitat, and shall not begin work on the activity until notified by the district engineer that the requirements of the ESA have been satisfied and that the activity is authorized.

---

[3] The majority of historic properties are not listed on the National Register of Historic Places and may require identification and evaluation by qualified historic preservation and/or archaeological consultants in consultation with USACE and the SHPO and/or THPO.

An activity may remain eligible for SV if the only listed species affected is the northern long-eared bat (*Myotis septrionalis*), and

(i) the activity: 1) will not remove trees ≥3 inches dbh at any time of the year; or ≤10 trees ≥ 3 inches dbh between November 1 – March 31; and 2) is not within the "buffer" of a NLEB hibernacula or maternity roost tree; and 3) does not involve work on bridges or existing riprap associated with dams; or

(ii) only after Section 7 consultation has been completed by USACE under the 4(d) Rule Streamlined Consultation.

d. Federal agencies shall follow their own procedures for complying with the requirements of the ESA while ensuring that USACE and any other federal action agencies are included in the consultation process.

e. Non-federal representatives designated by USACE to conduct informal consultation or prepare a biological assessment shall follow the requirements in the designation document(s) and the ESA. Non-federal representatives shall also provide USACE with the appropriate documentation to demonstrate compliance with those requirements. USACE will review the documentation and determine whether it is sufficient to address ESA compliance for the GP activity, or whether additional ESA consultation is necessary.

f. The requirements to comply with Section 7 of the ESA may be satisfied by a programmatic agreement (PA) or programmatic consultation (PC) with USACE, the New England District, or another federal agency. New England District PAs and PCs are found at: *www.nae.usace.army.mil/Missions/Regulatory*

13. Navigation.

a. No activity may cause more than a minimal adverse effect on navigation.

b. Any safety lights and signals prescribed by the U.S. Coast Guard, through regulations must be installed and maintained at the permittee's expense on authorized facilities in navigable WOTUS.

c. Any structure or work that extends closer to the horizontal limits of any USACE FNP than a distance of three times the project's authorized depth shall be subject to removal at the owner's expense prior to any future USACE dredging or the performance of periodic hydrographic surveys. This is applicable to SV eligible and PCN activities.

d. There shall be no unreasonable interference with navigation by the existence or use of the activity authorized herein, and no attempt shall be made by the permittee to prevent the full and free use by the public of all navigable waters at or adjacent to the activity authorized herein.

e. The permittee understands and agrees that if future U.S. operations require the removal, relocation, or other alteration of the structure or work herein authorized, or if, in the opinion of the Secretary of the Army or his authorized representative, said structure or work shall cause unreasonable obstruction to the free navigation of the navigable waters, the permittee will be required, upon due notice from USACE, to remove, relocate, or alter the structural work or obstructions caused thereby, without expense to the U.S. No claim shall be made against the U.S. on account of any such removal or alteration.

f. A PCN is required for all work in, over or under an FNP or its buffer zone unless otherwise indicated in Section III as the work may also require a Section 408 permit.

14. Heavy Equipment in Wetlands. Operating heavy equipment (drill rigs, fixed cranes, etc.) within wetlands shall be minimized, and such equipment shall not be stored, maintained or repaired in wetlands, to the maximum extent practicable. Where construction requires heavy equipment operation in wetlands, the equipment shall: a) have low ground pressure (typically <3

psi); b) be placed on swamp/construction/timber mats (herein referred to as “construction mats” or “mats”) that are adequate to support the equipment in such a way as to minimize disturbance of wetland soil and vegetation; or c) be operated on adequately dry or frozen wetlands such that shear pressure does not cause subsidence of the wetlands immediately beneath equipment and upheaval of adjacent wetlands. Construction mats are to be placed in the wetland from the upland or from equipment positioned on swamp mats if working within a wetland. Construction mats should be carried, and not dragged, into position, where feasible. Other support structures that are capable of safely supporting equipment may be used with written USACE authorization. Similarly, the permittee may request written authorization from USACE to waive use of mats during frozen or dry conditions. An adequate supply of spill containment equipment shall be maintained on site. Construction mats should be managed in accordance with the following construction mat best management practices:

• Mats should be in good condition to ensure proper installation, use and removal.
• Where feasible, mats should be carried and not dragged unless they are being used as a grading implement.
• Where feasible, place mats in a location that would minimize the amount needed for the wetland crossing.
• Minimize impacts to wetland areas during installation, use, and removal.
• Install adequate erosion and sediment controls at approaches to mats to promote a smooth transition to, and minimize sediment tracking onto, mats.
• In most cases, mats should be placed along the travel area so that the individual boards are resting perpendicular to the direction of traffic. No gaps should exist between mats. Mats should be placed far enough on either side of the resource area to rest on firm ground.
• Provide standard construction mat BMP details to work crews.
• Construction mats shall be thoroughly cleaned before re-use to minimize spread of invasive species.

15. Temporary Fill.

a. Temporary fill, construction mats and corduroy roads shall be entirely removed as soon as they are no longer needed to construct the authorized work. Temporary fill shall be placed in its original location or disposed of at an upland site and suitably contained to prevent its subsequent erosion into WOTUS.

b. All temporary fill and disturbed soils shall be stabilized to prevent its eroding into WOTUS where it is not authorized. Work shall include phased or staged development to ensure only areas under active development are exposed and to allow for stabilization practices as soon as practicable. Temporary fill must be placed in a manner that will prevent it from being eroded by expected high flows.

c. Unconfined temporary fill authorized for discharge into WOTUS shall consist of material that minimizes impacts to water quality (e.g. washed stone, stone, etc.).

d. Appropriate measures must be taken to maintain normal downstream flows and minimize flooding to the maximum extent practicable when temporary structures, work, and discharges of dredged or fill material, including cofferdams, are necessary for construction activities, access fills, or dewatering of construction sites. Materials shall be placed in a location and manner that does not adversely impact surface or subsurface water flow into or out of the wetland. Temporary fill authorized for discharge into wetlands shall be placed on geotextile fabric or other appropriate material laid on the pre-construction wetland grade where practicable to minimize impacts and to facilitate restoration to the original grade. Construction mats are excluded from this requirement.

e. Construction debris and/or deteriorated materials shall not be located in WOTUS.

16. Restoration of Wetland Areas.

a. Upon completion of construction, all disturbed wetland areas (the disturbance of these areas must be authorized) shall be stabilized with a wetland seed mix containing only plant species native to New England and shall not contain any species listed in the "Invasive and Other Unacceptable Plant Species" Appendix D in the "New England District Compensatory Mitigation Guidance" found at http://www.nae.usace.army.mil/Missions/Regulatory/Mitigation.aspx.

b. The introduction or spread of invasive plant species in disturbed areas shall be controlled. If construction mats are to be used, they shall be thoroughly cleaned before re-use.

c. In areas of authorized temporary disturbance, if trees are cut they shall be cut at or above ground level and not uprooted in order to prevent disruption to the wetland soil structure and to allow stump sprouts to revegetate the work area, unless otherwise authorized.

d. Wetland areas where permanent disturbance is not authorized shall be restored to their original condition and elevation, which under no circumstances shall be higher than the pre-construction elevation. Original condition means careful protection and/or removal of existing soil and vegetation, and replacement back to the original location such that the original soil layering and vegetation schemes are approximately the same, unless otherwise authorized.

17. Bank Stabilization. Projects involving construction or reconstruction/maintenance of bank stabilization structures within USACE jurisdiction should be designed to minimize environmental effects, effects to neighboring properties, scour, etc. to the maximum extent practicable. For example, vertical bulkheads should only be used in situations where reflected wave energy can be tolerated. This generally eliminates bodies of water where the reflected wave energy may interfere with or impact on harbors, marinas, or other developed shore areas. A revetment is sloped and is typically employed to absorb the direct impact of waves more effectively than a vertical seawall. It typically has a less adverse effect on the beach in front of it, abutting properties and wildlife.

18. Soil Erosion and Sediment Controls.

a. Appropriate soil erosion and sediment controls[4] (hereinafter referred to as "controls") must be used and maintained in effective operating condition during construction, and all exposed soil and other fills, as well as any work below the OHWM, must be permanently stabilized at the earliest practicable date. Permittees are encouraged to perform work within WOTUS during periods of low-flow or no-flow. Areas of temporary fill and/or cofferdams must be included in total waterway/wetlands impacts to determine applicability of the GPs.

b. No dewatering shall occur with direct discharge to waters or wetlands. Excess water in isolated work areas shall be pumped or directed to a sedimentation basin, tank or other dewatering structures in an upland area adequately separated from waters or wetlands where suspended solids shall be removed prior to discharge back into waters or wetlands. All discharge points back into waters and wetlands shall use appropriate energy dissipaters and erosion and sedimentation control BMPs.

c. Temporary controls shall be removed upon completion of work, but not until all exposed soil and other fills, as well as any work waterward of the OHWM, are permanently stabilized at the

[4] Appropriate soil erosion, sediment and turbidity controls include cofferdams, bypass pumping around barriers immediately up and downstream of the work footprint (i.e., dam and pump), installation of sediment control barriers (i.e., silt fence, vegetated filter strips, geotextile silt fences, filter tubes, erosion control mixes, hay bales or other devices) downhill of all exposed areas, stream fords, retention of existing vegetated buffers, application of temporary mulching during construction, phased construction, and permanent seeding and stabilization, etc.

earliest practicable date. Sediment and debris collected by these devices shall be removed and placed at an upland location in a manner that will prevent its later erosion into a waterway or wetland. Controls may be left in place if they are biodegradable, and flows and aquatic life movements are not disrupted.

d. The material within sandbags shall not be released during their removal, and trenches must be backfilled as soon as practicable to reduce turbidity impact duration.

19. Aquatic Life Movements and Management of Water Flows.

a. No activity may substantially disrupt the necessary life cycle movements of those species of aquatic life indigenous to the waterbody, including those species that normally migrate through the area, unless the activity's primary purpose is to impound water. Unless otherwise stated, activities permanently impounding water in a stream require a PCN to ensure impacts to aquatic life species are avoided and minimized. All permanent and temporary crossings of waterbodies and wetlands shall be:

i. Suitably culverted, bridged, or otherwise designed and constructed to maintain low flows to sustain the movement of aquatic species; and

ii. Properly aligned and constructed to prevent bank erosion or streambed scour both adjacent to and inside the crossing.

b. To avoid adverse impacts on aquatic organisms, the low flow channel/thalweg shall remain unobstructed during periods of low flow, except when it is necessary to perform the authorized work.

c. To the maximum extent practicable, the pre-construction course, condition, capacity, and location of open waters must be maintained for each activity, including stream channelization and storm water management activities. The activity must be constructed to withstand expected high flows. The activity shall not restrict or impede the passage of normal or high flows, unless the primary purpose of the activity is to impound water or manage high flows. The activity may alter the preconstruction course, condition, capacity, and location of open waters if it benefits the aquatic environment (e.g., stream restoration or relocation activities).

d. Activities that temporarily or permanently impact upstream or downstream flood conditions require a PCN.

20. Waterway/Wetland Work and Crossings.

a. All permanent crossings of rivers, streams, brooks, etc. (hereon referred to as "streams") shall meet the following performance standards in order to qualify for SV:

i. Design the structure to maintain a streambed composition and form throughout the culvert similar to and continuous with the adjacent reaches. To do this:
- Design and install streambed material and bedforms if not adequately supplied and developed naturally,
- Design profile and alignment through structure similar to those of adjacent stream reaches,
- Design culvert elevation to remain embedded for the life of the structure and in consideration of future channel conditions.

ii. Maintain velocities, turbulence and depths within the structure similar to those found in adjacent stream reaches across a range of desired flows.

b. The requirements to comply with the performance standards in GC 20a. above in order to proceed as a SV project do not apply to the following:

i. Temporary crossings in place for less than 90 days. Temporary culverts must be embedded unless they're installed during low flow (July 1 – October 1) and it's placed on geotextile fabric laid on the stream bed to ensure restoration to the original grade.

c. Applicants proposing new crossings, or maintenance or replacement of serviceable crossings should refer to the Guidelines for the Design of Stream/Road Crossings for Passage of Aquatic Organisms in Vermont.

d. Applicants shall use the least intrusive and environmentally damaging method to construct the stream crossing, following this sequential minimization process: bridge spans, open bottom arches or embedded culverts.

e. Permanent and temporary crossings of waterbodies and wetlands shall be installed in such a manner as to preserve hydraulic and ecological connectivity, on either side of the crossing. The permittee shall take necessary measures to correct wetland damage due to lack of hydraulic connectivity.

f. Projects using retrofit methods increasing flow velocity or slip lining (retrofitting an existing culvert by inserting a smaller diameter pipe) require a PCN, either as new or maintenance activities.

g. No projects involving open trench excavation in flowing waters, except riprap installation, are allowed under SV. Open trench excavation projects may qualify for SV provided (1) the work doesn't occur in flowing waters (requires using management techniques such as temporary flume pipes, culverts, cofferdams, etc.) and (2) normal flows are maintained upstream and downstream of the project area.

h. For projects that otherwise meet the terms of SV, in-stream construction work shall be conducted only during the low flow period of July 1 to October 1 in any year. Projects that are conducted outside that time period require a PCN, regardless of the waterway and/or wetland impact area.

21. Discharge of Pollutants. All activities involving any discharge of pollutants into WOTUS authorized under these GPs shall comply with applicable water quality standards, effluent limitations, standards of performance, prohibitions, and pretreatment standards and management practices established pursuant to the CWA (33 U.S.C. 1251), and applicable state and local laws. If applicable water quality standards, limitations, etc., are revised or modified during the term of this permit, the authorized work shall be modified to conform with these standards within 6 months of the effective date of such revision or modification, or within a longer period of time deemed reasonable by the District Engineer in consultation with the Regional Administrator of the EPA. Applicants may presume that State Water Quality Standards are met with the issuance of a 401 WQC or waiver (Applicable only to the Section 404 activity).

22. Spawning, Breeding, and Migratory Areas.

a. Jurisdictional activities and impacts such as excavations, discharges of dredged or fill material, and/or suspended sediment producing activities in jurisdictional waters that provide value as fish migratory areas, fish and shellfish spawning or nursery areas, or amphibian and migratory bird breeding areas, during spawning or breeding seasons shall be avoided and minimized to the maximum extent practicable.

b. Jurisdictional activities in WOTUS that provide value as breeding areas for migratory birds must be avoided to the maximum extent practicable. The permittee is responsible for obtaining any "take" permits required under the USFWS's regulations governing compliance with the Migratory Bird Treaty Act or the Bald and Golden Eagle Protection Act. The permittee should contact the appropriate local office of the USFWS to determine if such "take" permits are required for a particular activity.

23. Storage of Seasonal Structures. Seasonal or recreational structures such as pier sections, floats, etc., that are removed from the waterway for a portion of the year shall be stored in an upland location, located above the OHWM and not in wetlands.

24. Environmental Functions and Values. The permittee shall make every reasonable effort to carry out the construction or operation of the work authorized herein in a manner that minimizes any adverse impacts on existing fish, wildlife, and the environmental functions to the extent practicable. The permittee will discourage the establishment or spread of plant species identified as non-native invasive species by any federal or state agency.

25. Vernal Pools.

a. On projects requiring a PCN, vernal pools must be identified on the plan showing aquatic resource delineations.

b. A PCN is required if a discharge of dredged or fill material is proposed in a vernal pool located within WOTUS.

c. Adverse impacts to vernal pools, vernal pool envelopes, and critical terrestrial habitats should be avoided and minimized to the maximum extent practicable.

d. GC 25(b) and (c) do not apply to projects that are within a municipality that meets the provisions of a USACE-approved VP Special Area Management Plan (VP SAMP) and are otherwise eligible for SV, and the applicant meets the requirements to utilize the VP SAMP.

26. Invasive Species. The introduction, spread, or the increased risk of invasion of invasive plant or animal species on the project site, into new or disturbed areas, or areas adjacent to the project site caused by the site work shall be avoided. Hence, swamp and timber mats and construction equipment shall be thoroughly cleaned before reuse/relocation.

27. Permit/Authorization Letter On-Site. For PCN projects, the permittee shall ensure that a copy of these GPs and the accompanying authorization letter are at the work site (and the project office) whenever work is being performed, and that all personnel with operational control of the site ensure that all appropriate personnel performing work are fully aware of its terms and conditions. The entire permit authorization shall be made a part of any and all contracts and sub-contracts for work that affect areas of USACE jurisdiction at the site of the work authorized by these GPs. This shall be achieved by including the entire permit authorization in the specifications for work. The term “entire permit authorization” means these GPs, including general conditions and the authorization letter (including its drawings, plans, appendices and other attachments), and also includes permit modifications. If the authorization letter is issued after the construction specifications, but before receipt of bids or quotes, the entire permit authorization shall be included as an addendum to the specifications. If the authorization letter is issued after receipt of bids or quotes, the entire permit authorization shall be included in the contract or sub-contract as a change order. Although the permittee may assign various aspects of the work to different contractors or sub-contractors, all contractors and sub-contractors shall be obligated by contract to comply with all environmental protection provisions contained within the entire authorization letter, and no contract or sub-contract shall require or allow unauthorized work in areas of USACE jurisdiction.

28. Inspections. The permittee shall allow USACE to make periodic inspections at any time deemed necessary in order to ensure that the work is being or has been performed in accordance with the terms and conditions of this permit. To facilitate these inspections, the permittee shall complete and return the Work Start Notification Form and the Compliance Certification Form to

USACE when provided with a PCN verification letter. The USACE may also require post-construction engineering drawings for completed work or post-dredging survey drawings for any dredging work.

29. Maintenance. The permittee shall maintain the activity authorized by these GPs in good condition and in conformance with the terms and conditions of this permit. This does not include maintenance of dredging projects. Maintenance dredging is subject to the review thresholds in General Permit 7 in Appendix A, as well as any conditions included in a written USACE authorization. Maintenance dredging includes only those areas and depths previously authorized and dredged. Some maintenance activities may not be subject to regulation under Section 404 in accordance with 33 CFR 323.4(a)(2).

30. Property Rights. Per 33 CFR 320.4(g)(6), these GPs do not convey any property rights, either in real estate or material, or any exclusive privileges, nor does it authorize any injury to property or invasion of rights or any infringement of federal, state, or local laws or regulations.

31. Transfer of GP Verifications. If the permittee sells the property associated with a GP verification, the permittee may transfer the GP verification to the new owner by submitting a letter to USACE to validate the transfer. A copy of the GP verification shall be attached to the letter, the letter shall contain the name, address, phone number and email of the transferee (new owner), shall include the following statement and signature, and be emailed to cenae-r-vt@usace.army.mil or mailed to: U.S. Army Corps of Engineers, Vermont Project Office, 11 Lincoln Street, Room 210, Essex Junction, Vermont 05452.

When the structures or work authorized by this general permit are still in existence at the time the property is transferred, the terms and conditions of this general permit, including any special conditions, will continue to be binding on the new owner(s) of the property. To validate the transfer of this general permit and the associated liabilities associated with compliance with its terms and conditions, have the transferee sign and date below.

_____*(Transferee Printed Name)*
_____(Transferee Signature)
_____(Date)

32. Modification, Suspension, and Revocation. These GPs and any individual authorizations issued thereof may be modified, suspended, or revoked in whole or in part pursuant to the policies and procedures of 33 CFR 325.7, and any such action shall not be the basis for any claim for damages against the United States.

33. Special Conditions. The USACE may impose other special conditions on a project authorized pursuant to these GPs that are determined necessary to minimize adverse navigational and/or environmental effects or based on any other factor of the public interest. These may be based on concerns from the VT ANR, SHPO, THPO or a Federal resource agency. Failure to comply with all conditions of the authorization, including special conditions, will constitute a permit violation and may subject the permittee to criminal, civil, or administrative penalties and/or restoration.

34. False or Incomplete Information. If USACE makes a determination regarding the eligibility of a project under this permit and subsequently discovers that it has relied on false, incomplete, or inaccurate information provided by the permittee, the authorization will not be valid, and the U.S. government may institute appropriate legal proceedings.

35. Abandonment. If the permittee decides to abandon the activity authorized under this GP, unless such abandonment is merely the transfer of property to a third party, he/she may be required to restore the area to the satisfaction of USACE.

36. Enforcement cases. These GPs do not apply to any existing or proposed activity in USACE jurisdiction associated with an ongoing USACE or EPA enforcement action, until such time as the enforcement action is resolved or USACE determines that the activity may proceed independently without compromising the enforcement action.

37. Water Quality. Applicants shall satisfy any conditions imposed by the State of Vermont and EPA, where applicable, in their Clean Water Act Section 401 WQC for these GPs, or in any Individual Section 401 WQC. See Section V. for state-specific contact information and to determine if any action is required to obtain a 401 WQC. USACE may require additional water quality management measures to ensure that the authorized activity does not cause or contribute to a violation of water quality standards. All projects authorized by these GPs shall be designed, constructed and operated to minimize or eliminate the discharge of pollutants.

38. Duration of Authorization.

a. These GPs expire five years from the date issued as listed at the top of the cover sheet. Activities authorized by these GPs that have either commenced (i.e., are under construction) or are under contract to commence in reliance upon this authorization will have an additional year from the expiration date to complete the work. The permittee must be able to document to USACE's satisfaction that the project was under construction or under contract by the expiration date of these GPs. If work is not completed within the one-year extended timeframe, the permittee must contact USACE. The USACE may issue a new authorization, provided the project meets the terms and conditions of the GPs in effect at the time.

b. Activities authorized under these GPs will remain authorized until the GPs expire, unless discretionary authority has been exercised on a case-by-case basis to modify, suspend, or revoke the authorization in accordance with 33 CFR 325.2(e)(2). Activities completed under the SV or PCN authorizations of these GPs will continue to be authorized after its expiration date.

V. CONTACTS FOR VERMONT GENERAL PERMITS

1. Federal

U.S. Army Corps of Engineers
New England District, Regulatory Division
Vermont Project Office
11 Lincoln Street, Room 210
Essex Junction, Vermont 05452
(802) 872-2893, (802) 879-7638 fax
www.nae.usace.army.mil/missions/regulatory
cenae-r-vt@usace.army.mil

U.S. Environmental Protection Agency
5 Post Office Square, Suite 100
Boston, Massachusetts 02109
(617) 918-1692

U.S. Fish and Wildlife Service
70 Commercial Street, Suite 300
Concord, New Hampshire 03301-5087
(603) 223-2541

National Park Service
North Atlantic Region
15 State Street
Boston, Massachusetts 02109
(617) 223-5203

2. Historic Resources

State Historic Preservation Officer
Division for Historic Preservation
National Life Building
Drawer 20
Montpelier, Vermont 05620-0501
(802) 828-3211

Tribal Historic Preservation Officer
c/o Stockbridge-Munsee Community
86 Spring Street
Williamstown, Massachusetts 01267
(413) 884-6048
Area of concern: Addison, Rutland and Bennington Counties
thpo@mohican-nsn.gov

Tribal Historic Preservation Officer
c/o Wampanoag Tribe of Gay Head (Aquinnah)
20 Black Brook Road
Aquinnah, Massachusetts 02535
(508) 645-9265 THPO@wampanoagtribe-nsn.gov
Area of Concern: All Vermont counties except Addison, Rutland and Bennington

3. Vermont Agency of Natural Resources

Department of Environmental Conservation
Wetlands Program
Watershed Management Division
1 National Life Drive, Main 2
Montpelier, VT 05620-3522

Department of Environmental Conservation
River Management Program
Watershed Management Division
1 National Life Drive, Main 2
Montpelier, VT 05620-3522

Department of Environmental Conservation
Lakes and Ponds Program
Watershed Management Division
1 National Life Drive, Main 2
Montpelier, VT 05620-3522

Department of Environmental Conservation
Dam Safety Program
Facilities Engineering Division
1 National Life Drive, Main 2
Montpelier, VT 05620-3522

Vermont Department of Fish & Wildlife
1 National Life Drive, Main 2
Montpelier, VT 05620-3522

State endangered species
Vermont Department of Fish & Wildlife
Nongame and Natural Heritage Program
1 National Life Drive, Main 2
Montpelier, VT 05620-3522

VI. DEFINITIONS

Action Area: The "Endangered Species Consultation Handbook – Procedures for Conducting Consultation and Conference Activities Under Section 7 of the ESA," defines action area as "all areas to be affected directly or indirectly by the federal action and not merely the immediate area involved in the action. [50 CFR 402.02]."
Artificial Reef: A structure which is constructed or placed in waters for the purpose of enhancing fishery resources and commercial and recreational fishing opportunities.
Attendant Features: Occurring with or as a result of; accompanying.
Biodegradable: A material that decomposes into elements found in nature within a reasonably short period of time and will not leave a residue of plastic or a petroleum derivative in the environment after degradation. In contrast, degradable plastics break down into plastic fragments that remain in the environment after degradation. Examples of biodegradable materials include jute, sisal, cotton, straw, burlap, coconut husk fiber (coir) or excelsior. In contrast, degradable plastics break down into plastic fragments that remain in the environment after degradation. Photodegradable, UV degradable or Oxo- (bio)degradable plastics are not considered biodegradable under this GP.
Boating facilities: These provide, rent, or sell mooring space, such as marinas, boat/yacht clubs, boat yards, dockominiums, town facilities, etc. Not classified as boating facilities are piers shared between two abutting properties or town mooring fields that charge an equitable user fee based on the actual costs incurred.
Compensatory mitigation: The restoration (reestablishment or rehabilitation), establishment (creation), enhancement, and/or, in certain circumstances, preservation of aquatic resources for the purposes of offsetting unavoidable adverse impacts which remain after all appropriate and practicable avoidance and minimization has been achieved.
Construction mats: Construction, swamp and timber mats (herein referred to as "construction mats") are generic terms used to describe structures that distribute equipment weight to prevent wetland damage while facilitating passage and providing work platforms for workers and equipment. They are comprised of sheets or mats made from a variety of materials in various sizes. A timber mat consists of large timbers bolted or cabled together.
Currently serviceable: Useable as is or with some minor maintenance, but not so degraded as to essentially require reconstruction.
Direct effects: The loss of aquatic ecosystem within the footprint of the discharge of dredged or fill material. Direct effects are caused by the action and occur at the same time and place.
Dredged material and discharge of dredged material: These are defined at 33 CFR 323.2(c) and (d). The term "dredged material" means material that is excavated or dredged from waters of the United States.
Discharge: The term "discharge" means any discharge of dredged or fill material into waters of the United States.
Enhancement: The manipulation of the physical, chemical, or biological characteristics of an aquatic resource to heighten, intensify, or improve a specific aquatic resource function(s). Enhancement results in the gain of selected aquatic resource function(s), but may also lead to a decline in other aquatic resource function(s). Enhancement does not result in a gain in aquatic resource area.
Ephemeral stream: A stream with flowing water only during, and for a short duration after, precipitation events in a typical year. Ephemeral stream beds are located above the water table year-round. Groundwater is not a source of water for the stream. Runoff from rainfall is the primary source of water for stream flow.

Establishment (creation): The manipulation of the physical, chemical or biological characteristics present to develop an aquatic resource that did not previously exist at an upland site. Establishment results in a gain in aquatic resource area.
Expansions: Work that increases the footprint of fill, depth of basin or drainage feature, structures or floats, or slip capacity.
Fill material & discharge of fill material: These are defined at 33 CFR 323.2(e) and (f). The term fill material is defined as material placed in WOTUS where the material has the effect of either replacing any portion of a water of the U.S. with dry land or changing the bottom elevation of any portion of a water of the U.S.
Federal navigation projects (FNPs): These areas are maintained by USACE, authorized, constructed and maintained on the premise that they will be accessible and available to all on equal terms. They are comprised of USACE Federal anchorages, Federal channels and Federal turning basins. The following are FNPs in VT, and more information, including the limits, is provided at www.nae.usace.army.mil/missions/navigation and www.nan.usace.army.mil/Missions/Civil-Works/:

Burlington Harbor
Channel Between the North and South Hero Islands
Gordons Landing
Narrows of Lake Champlain
Otter Creek
St. Albans Harbor
Swanton Harbor

Flume: An open artificial water channel, in the form of a gravity chute that leads water from a diversion dam or weir completely aside a natural flow. A flume can be used to measure the rate of flow.
Historic Property: Any prehistoric or historic district, site (including archaeological site), building, structure, or other object included in, or eligible for inclusion in, the National Register of Historic Places maintained by the Secretary of the Interior. This term includes artifacts, records, and remains that are related to and located within such properties. The term includes properties of traditional religious and cultural importance to an Indian tribe or Native Hawaiian organization and that meet the National Register criteria (36 CFR 60).
Independent utility: A test to determine what constitutes a single and complete non-linear project in the USACE regulatory program. A project is considered to have independent utility if it would be constructed absent the construction of other projects in the project area. Portions of a multi-phase project that depend upon other phases of the project do not have independent utility. Phases of a project that would be constructed even if the other phases were not built can be considered as separate single and complete projects with independent utility.
Indirect effects: Effects that are caused by the activity and are later in time or farther removed in distance, but are still reasonably foreseeable.
Individual Permit: A Department of the Army authorization that is issued following a case-by-case evaluation of a specific structure or work in accordance with the procedures of 33 CFR 322, or a specific project involving the proposed discharge(s) in accordance with the procedures of 33 CFR 323, and in accordance with the procedures of 33 CFR 325 and a determination that the proposed discharge is in the public interest pursuant to 33 CFR 320.
Intermittent stream: A stream with flowing water during certain times of the year, when groundwater provides water for stream flow. During dry periods, intermittent streams may not have flowing water. Runoff from rainfall is a supplemental source of water for stream flow.
Maintenance: Maintenance does not include any modification that changes the character, scope, or size of the original fill design.

Mechanized land clearing: Land clearing activities using mechanized equipment such as backhoes or bulldozers with sheer blades, rakes or discs constitute point source discharges and are subject to section 404 jurisdiction when they take place in wetlands are waters of the U.S (Regulatory Guidance Letter 90-05).
Minor deviations: Deviations in the structure's configuration or filled area, including those due to changes in materials, construction techniques, or current construction codes or safety standards, which are necessary to make repair, rehabilitation, or replacement are permitted, provided the adverse environ-mental effects resulting from such repair, rehabilitation, or replacement are minimal.
Navigable waters of the United States: These are a subset of WOTUS and are defined at 33 CFR 329. The jurisdictional limits (33 CFR 329.11) extend laterally to the entire water surface and bed of a navigable waterbody, which include all the land and waters below OHWM. Jurisdiction thus extends to the edge (as determined above) of all such waterbodies, even though portions of the waterbody may be extremely shallow or obstructed by shoals, vegetation or other barriers. Marshlands and similar areas are thus considered navigable in law, but only so far as the area is subject to inundation by the ordinary high waters. In Vermont these waters are: the Connecticut River, Lake Champlain, Lake Memphremagog, Wallace Pond, Ompompanoosuc River (to mile 3.8), Waits River (to mile 0.9), the Black River (mouth to mile 25 in Craftsbury), the Battenkill River (to mile 50 in Manchester), the Lamoille River (mouth to mile 79 in Greensboro), the Missisquoi River (including the North Branch, from the mouth to mile 88.5 in Lowell), Otter Creek (mouth to mile 63.8 in Procter), Winooski River (mouth to Marshfield), Moose River (from Passumpsic River to the Victory Town Line), Nulhegan River (mouth to its source including the East Branch, the Black Branch and the Yellow Branch), Paul Stream (mouth to the source), East Branch of the Passumpsic River (from the confluence with the Passumpsic River to East Haven), Passumpsic River (mouth to confluence with the East Branch), White River (mouth to its source), Wells River (mouth to Groton Pond).
Ordinary High Water Mark (OHWM): A line on the shore established by the fluctuations of water and indicated by physical characteristics, or by other appropriate means that consider the characteristics of the surrounding areas. See 33 CFR 328.3(e).
Perennial stream: A stream with flowing water year-round during a typical year. The water table is located above the stream bed for most of the year. Groundwater is the primary source of water for stream flow. Runoff from rainfall is a supplemental source of water for stream flow.
Practicable: Available and capable of being done after taking into consideration cost, existing technology, and logistics in light of overall project purposes.
Permanent impacts: Permanent impacts means WOTUS that are permanently affected by filling, flooding, excavation, or drainage because of the regulated activity. Permanent impacts include permanent discharges of dredged or fill material that change an aquatic area to dry land, increase the bottom elevation of a waterbody, or change the use of a waterbody.
Preservation: The removal of a threat to, or preventing the decline of, aquatic resources by an action in or near those aquatic resources. This term includes activities commonly associated with the protection and maintenance of aquatic resources through the implementation of appropriate legal and physical mechanisms. Preservation does not result in a gain of aquatic resource area or functions.
Re-establishment: The manipulation of the physical, chemical, or biological characteristics of a site with the goal of returning natural/historic functions to a former aquatic resource. Reestablishment results in rebuilding a former aquatic resource and results in a gain in aquatic resource area and functions.
Rehabilitation: The manipulation of the physical, chemical, or biological characteristics of a site with the goal of repairing natural/historic functions to a degraded aquatic resource.

Rehabilitation results in a gain in aquatic resource function, but does not result in a gain in aquatic resource area.

Restoration: The manipulation of the physical, chemical, or biological characteristics of a site with the goal of returning natural/historic functions to a former or degraded aquatic resource. For the purpose of tracking net gains in an aquatic resource area, restoration is divided into two categories: reestablishment and rehabilitation.

Secondary effects: These are effects on an aquatic ecosystem that are associated with a discharge of dredged or fill materials, but do not result from the actual placement of the dredged or fill material. Information about secondary effects on aquatic ecosystems shall be considered prior to the time final Section 404 action is taken by permitting authorities. Some examples of secondary effects on an aquatic ecosystem are a) aquatic areas drained, flooded, fragmented, or mechanically cleared, b) fluctuating water levels in an impoundment and downstream associated with the operation of a dam, c) septic tank leaching and surface runoff from residential or commercial developments on fill, and d) leachate and runoff from a sanitary landfill located in WOTUS See 40 CFR 230.11(h).

Special aquatic sites (SAS): These include inland wetlands, mud flats, vegetated shallows (submerged aquatic vegetation), and riffle and pool complexes. These are defined at 40 CFR 230.3 and listed in 40 CFR 230 Subpart E.

Streambed: The substrate of the stream channel between the OHW marks. The substrate may be bedrock or inorganic particles that range in size from clay to boulders. Wetlands contiguous to the streambed, but outside of the OHW marks, are not considered part of the streambed.

Stream channelization: The manipulation of a stream's course, condition, capacity, or location that causes more than minimal interruption of normal stream processes. A channelized stream remains a water of the United States.

Structure: An object that is arranged in a definite pattern of organization. Examples of structures include, without limitation, any pier, boat dock, boat ramp, wharf, dolphin, weir, boom, breakwater, bulkhead, revetment, riprap, jetty, artificial island, artificial reef, permanent mooring structure, power transmission line, permanently moored floating vessel, piling, aid to navigation, or any other manmade obstacle or obstruction.

Temporary impacts: Temporary impacts include, but are not limited to, WOTUS that are temporarily filled, flooded, excavated, drained or mechanically cleared because of the regulated activity.

Utility Line: Any pipe or pipeline for the transportation of any gaseous, liquid, liquescent, or slurry substance, for any purpose, and any cable, line, or wire for the transmission for any purpose of electrical energy, telephone, data, and telegraph messages, and radio and television communication. The term "utility line" does not include activities that drain a water of the U.S., such as drainage tile or French drains, but it does apply to pipes conveying drainage from another area.

Vegetated shallows: Permanently inundated areas that under normal circumstances support communities of rooted aquatic vegetation in rivers and lakes. Note: These areas are also commonly referred to as submerged aquatic vegetation (SAV).

Vernal pools (VPs): For the purposes of these GPs, VPs are depressional wetland basins that typically go dry in most years and may contain inlets or outlets, typically of intermittent flow. Vernal pools range in both size and depth depending upon landscape position and parent material(s). In most years, VPs support one or more of the following obligate indicator species: wood frog, spotted salamander, blue-spotted salamander, marbled salamander, Jefferson's salamander and fairy shrimp. However, they should preclude sustainable populations of predatory fish.

Water diversions: Water diversions are activities such as bypass pumping (e.g., “dam and pump”) or water withdrawals. Temporary flume pipes, culverts or cofferdams where normal flows are maintained within the stream boundary’s confines aren’t water diversions. “Normal flows” are defined as no change in flow from pre-project conditions.

Weir: A barrier across a river designed to alter the flow characteristics. In most cases, weirs take the form of a barrier, smaller than most conventional dams, across a river that causes water to pool behind the structure (not unlike a dam) and allows water to flow over the top. Weirs are commonly used to alter the flow regime of the river, prevent flooding, measure discharge and help render a river navigable.

Waters of the United States (WOTUS): Waters of the United States are defined in 33 CFR 328.3. These waters include more than navigable WOTUS and are the waters where permits are required for the discharge of dredged or fill material pursuant to Section 404 of the Clean Water Act. WOTUS include jurisdictional wetlands.

Title-19 Standard Conditions: Permit No. 4603

1. A) The project shall be constructed as defined in the documents linked to the PLYMOUTH ER P23-1(327) project in this Title 19 Share Point site. B) Any amendment to the plans which in any way affects surface waters and/or riparian corridors shall be reviewed by this office and approval received by VTrans prior to construction. C) Any construction modifications that deviate from the approved plans which in any way affects surface waters and/or riparian corridors shall be reviewed by this office and approval received by VTrans prior to the construction activity.

2. That the contractor's schedule of accomplishment of water quality related work to be submitted prior to the start of construction, and as required under general specification #105.23(a) shall include site-specific methods of operation. Temporary construction fills, check dams, silt barriers and other erosion control works shall be described and shown on pertinent plans.

3. That the Vermont Agency of Transportation general specification #105.23 addressing the control of erosion and siltation be carefully adhered to in order to minimize turbidity and other adverse impacts.

4. That the Vermont Agency of Transportation general specification #105.24 addressing pollution control be carefully followed in order to limit, if not prevent altogether, the discharge of fuel, grease, oil, raw concrete, paint, chemicals, and debris to any waters of the state.

5. An on-site pre-construction conference between the contractor, VTrans Resident Engineer and the River Management Engineer shall be held prior to commencement of any in-stream construction. Please contact the ANR River Management Engineer listed at the top of this email to schedule the conference.

6. Approved in-stream working dates on this project are from July 1st to October 1st (unless otherwise specified by the River Management Engineer). Contractor proposals for construction activities in or adjacent to flowing water during the restricted period must be isolated from stream flow and must receive prior approval from the River Management Engineer.

7. The provisions of this approval shall be made a part of the construction contract.

Project		Description	Route	Waterway	Standard Conditi...	River Manageme...	ANR Permit Num...
PlymouthERP23-1(327)	···	Replacement of Bridge No. 4 over Pinney Hollow Brook	VT 100A	Pinney Hollow Brook	Yes	SNJ	4603

Title-19 Standard Conditions:

1. A) The project shall be constructed as defined in the documents linked to the [PROJECT NAME] project in this Title 19 Share Point site. B) Any amendment to the plans which in any way affects surface waters and/or riparian corridors shall be reviewed by this office and approval received by VTrans prior to construction. C) Any construction modifications that deviate from the approved plans which in any way affects surface waters and/or riparian corridors shall be reviewed by this office and approval received by VTrans prior to the construction activity.
2. That the contractor's schedule of accomplishment of water quality related work to be submitted prior to the start of construction, and as required under general specification #105.23(a) shall include site-specific methods of operation. Temporary construction fills, check dams, silt barriers and other erosion control works shall be described and shown on pertinent plans.
3. That the Vermont Agency of Transportation general specification #105.23 addressing the control of erosion and siltation be carefully adhered to in order to minimize turbidity and other adverse impacts.
4. That the Vermont Agency of Transportation general specification #105.24 addressing pollution control be carefully followed in order to limit, if not prevent altogether, the discharge of fuel, grease, oil, raw concrete, paint, chemicals, and debris to any waters of the state.
5. An on-site pre-construction conference between the contractor, VTrans Resident Engineer and the River Management Engineer shall be held prior to commencement of any in-stream construction. Please contact the ANR River Management Engineer listed at the top of this email to schedule the conference.
6. Approved in-stream working dates on this project are from July 1st to October 1st (unless otherwise specified by the River Management Engineer). Contractor proposals for construction activities in or adjacent to flowing water during the restricted period must be isolated from stream flow and must receive prior approval from the River Management Engineer.
7. The provisions of this approval shall be made a part of the construction contract.

Created ↓	Project	Description	Route	Waterway	Standard Conditi...	River Manageme...	ANR Permit Num...
August 25	**PlymouthERP23-1(328)**	replacement of Bridge No. 7 over Pinney Hollow Brook with approach roadway and related channel work	VT Route 100A	Pinney Hollow Brook	Yes	SNJ	4565

REVIEWER NOTES:

1. FULL ROADWAY CLOSURE IS ANTICIPATED TO REPLACE THE EXISTING BRIDGE. TRAFFIC IS EXPECTED TO BE HANDLED WITH AN OFFSITE DETOUR.
2. TEMPORARY RELOCATION OF STREAM ANTICIPATED DURING CONSTRUCTION OF THE BRIDGE.
3. TEMPORARY RIGHT OF WAY FOR CONSTRUCTION ACCESS IS ANTICIPATED.
4. AERIAL UTILITY RELOCATION IS PROPOSED FOR CONSTRUCTION.
5. EPSC = LOW RISK SITE

STATE OF VERMONT
AGENCY OF TRANSPORTATION

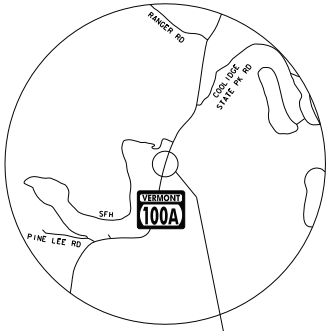

NOT TO SCALE

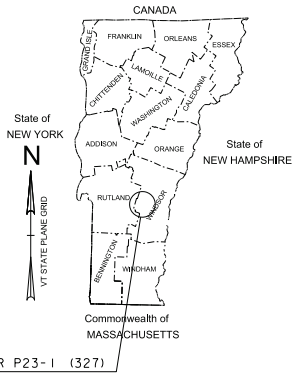

PLYMOUTH ER P23-1 (327)
VT 100A BRIDGE 4

PROPOSED IMPROVEMENT
BRIDGE PROJECT
TOWN OF PLYMOUTH
COUNTY OF WINDSOR
VT ROUTE 100A BRIDGE 4 (MAJOR COLLECTOR)

PROJECT LOCATION: IN THE TOWN OF PLYMOUTH ON VT ROUTE 100A APPROXIMATELY 3.85 MILES SOUTHWEST OF THE INTERSECTION WITH US ROUTE 4.

PROJECT DESCRIPTION: REPLACEMENT OF BRIDGE 4 OVER PINNEY HOLLOW BROOK WITH APPROACH ROADWAY AND RELATED CHANNEL WORK.

LENGTH OF STRUCTURE:	43.46 FEET
LENGTH OF ROADWAY:	300.00 FEET
LENGTH OF PROJECT:	350.00 FEET

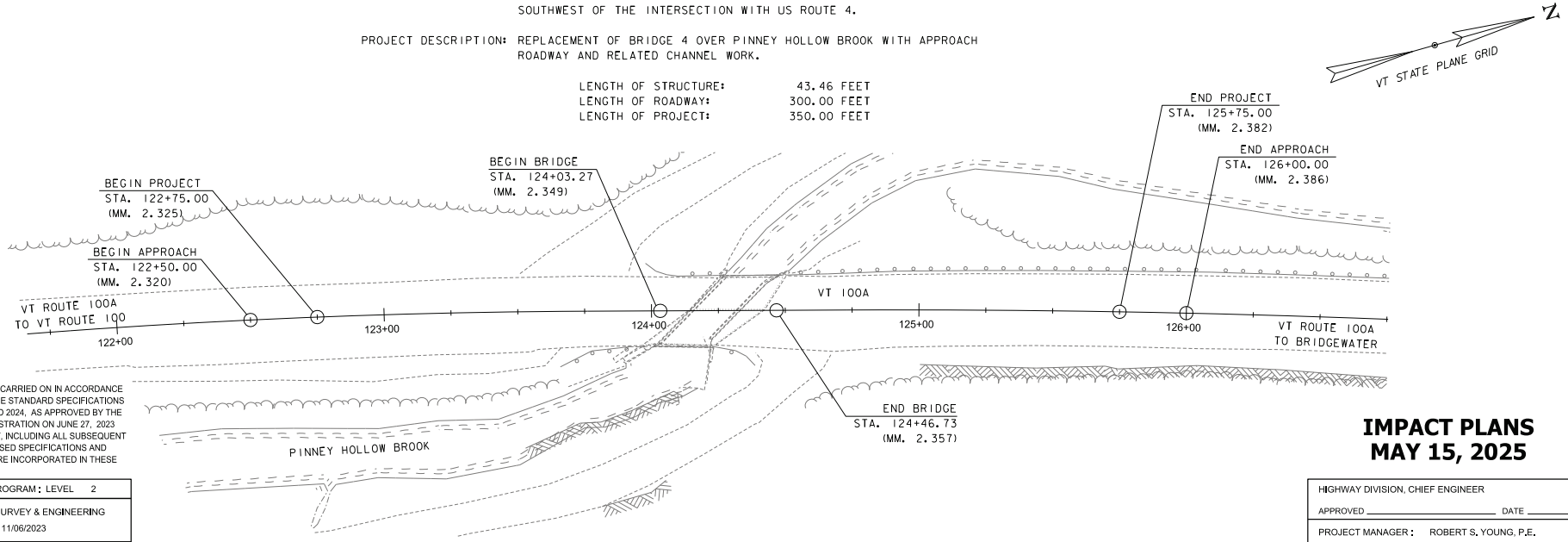

CONSTRUCTION IS TO BE CARRIED ON IN ACCORDANCE WITH THESE PLANS AND THE STANDARD SPECIFICATIONS FOR CONSTRUCTION DATED 2024, AS APPROVED BY THE FEDERAL HIGHWAY ADMINISTRATION ON JUNE 27, 2023 FOR USE ON THIS PROJECT, INCLUDING ALL SUBSEQUENT REVISIONS AND SUCH REVISED SPECIFICATIONS AND SPECIAL PROVISIONS AS ARE INCORPORATED IN THESE PLANS.

IMPACT PLANS
MAY 15, 2025

QUALITY ASSURANCE PROGRAM: LEVEL 2

SURVEYED BY: VT SURVEY & ENGINEERING
SURVEYED DATE: 11/06/2023

DATUM
VERTICAL NAVD88
HORIZONTAL NAD83(2011)

0 20 40
SCALE IN FEET

GREEN

HIGHWAY DIVISION, CHIEF ENGINEER
APPROVED _____ DATE _____

PROJECT MANAGER: ROBERT S. YOUNG, P.E.

PROJECT NAME: PLYMOUTH
PROJECT NUMBER: ER P23-1 (327)

SHEET 1 OF 11 SHEETS

STATE OF VERMONT
AGENCY OF TRANSPORTATION

PRELIMINARY INFORMATION SHEET (BRIDGE)

Version
20213.06.16.13

INDEX OF SHEETS

PLAN SHEETS

1	TITLE SHEET
2	PRELIMINARY INFORMATION SHEET
3	LEGEND SHEET
4	ENVIRONMENTAL SYMBOLOGY AND LEGEND
5	EXISTING CONDITIONS
6	EARTH DISTURBANCE PLAN
7	IMPERVIOUS SURFACES
8	FLOOD HAZARD AND RIVER CORRIDOR PLAN
9	ACOE PLAN
10-11	ACOE CHANNEL CROSS SECTION SHEETS

STANDARDS LIST

B-5	SLOPE GRADING, EMBANKMENTS, MUCK	06-01-1994
C-10	CURBING	02-17-2022
E-10	ROLLED EROSION CONTROL PRODUCT, TYPE I	04-07-2020
E-12	STABILIZED CONSTRUCTION ENTRANCE	04-07-2020
E-15	SILT FENCE	04-07-2020
E-121	STANDARD SIGN PLACEMENT - CONVENTIONAL ROAD	08-08-1995
E-193	PAVEMENT MARKING DETAILS	08-18-1995
G-1	STEEL BEAM GUARDRAIL DETAILS (POST, DELINEATOR, TYPICALS)	03-10-2017
G-1D	STEEL BEAM GUARDRAIL DETAILS (END TERMINAL, ANCHOR, MEDIAN)	03-10-2017
G-16	STEEL BEAM GUARDRAIL ATTACHMENTS TO EXISTING BRIDGE, TERMINAL	10-02-2018
G-19	GENERIC GRADING PLANS FOR GUARDRAIL END TERMINALS	10-02-2018
J-1	PROJECT AND BOUNDARY MARKERS	06-01-1994
S-361A	BRIDGE RAILING, GALVANIZED 3 RAIL BOX BEAM	06-25-2024
S-361B	BRIDGE RAILING, GALVANIZED 3 RAIL BOX BEAM	02-15-2023
S-361C	GUARDRAIL APPROACH SECTION, GALVANIZED 3 RAIL BOX BEAM	02-15-2023
S-400	BRIDGE JOINT ASPHALTIC PLUG	04-07-2020
S-500	CONCRETE DETAILS AND NOTES	02-15-2023
S-501	CONCRETE DETAILS AND NOTES	02-15-2023
T-1	TRAFFIC CONTROL GENERAL NOTES	04-25-2016
T-2	TRAFFIC SIGN GENERAL NOTES	04-07-2020
T-10	CONVENTIONAL ROADS CONSTRUCTION APPROACH SIGNING	08-06-2012
T-17	TRAFFIC CONTROL MISCELLANEOUS DETAILS	08-06-2012
T-24	TRAFFIC CONTROL FOR MAINTENANCE PAVEMENT MARKING OPERATION	08 06 2012
T-28	CONSTRUCTION SIGN DETAILS	08-06-2012
T-29	CONSTRUCTION SIGN DETAILS	08-06-2012
T-30	CONSTRUCTION SIGN DETAILS	02-17-2022
T-31	CONSTRUCTION SIGN DETAILS	08-06-2012
T-35	CONSTRUCTION ZONE LONGITUDINAL DROP-OFFS	08-06-2012
T-36	CONSTRUCTION ZONE LONGITUDINAL DROP-OFFS FOR PAVING	08-06-2012
T-40	DELINEATORS AND MILEPOSTS	01-02-2013
T-42	BRIDGE NUMBER PLAQUE	04-09-2014
T-45	SQUARE TUBE SIGN POST AND ANCHOR	01-02-2013
T-56	STANDARD SIGN PLACEMENT	10-26-2015

HIGHWAY SAFETY AND DESIGN DETAILS

HSD-621.01	POST AND BLOCKOUT DETAILS FOR STEEL BEAM GUARDRAIL, GALVANIZED	06/09/2015
HSD-621.06	MISCELLANEOUS GUARDRAIL DETAILS	02/27/2017
HSD-621.07A	MIDWEST GUARDRAIL SYSTEM (MGS)	01/04/2021
HSD-621.07B	W-BEAM GUARDRAIL COMPONENTS	04/17/2019
HSD-621.07C	MIDWEST GUARDRAIL SYSTEM (MGS) ANCHOR	04/17/2019
HSD-621.07D	MIDWEST GUARDRAIL SYSTEM (MGS) ANCHOR COMPONENTS	04/17/2019
HSD-621.07E	MIDWEST GUARDRAIL SYSTEM (MGS) ANCHOR COMPONENTS	04/17/2019
HSD-621.07F	MIDWEST GUARDRAIL SYSTEM TRANSITION SECTION	01/04/2021

FINAL HYDRAULIC REPORT

HYDROLOGIC DATA

Date:

DRAINAGE AREA : -
CHARACTER OF TERRAIN : -
STREAM CHARACTERISTICS : -
NATURE OF STREAMBED : -

PEAK FLOW DATA - ANNUAL EXCEEDANCE PROBABILITY (AEP)

43% = - 2% = -
10% = - 1% = -
4% = - 0.2% = -

DATE OF FLOOD OF RECORD : -
ESTIMATED DISCHARGE: -
WATER SURFACE ELEV.: -
NATURAL STREAM VELOCITY : -
ICE CONDITIONS : -
DEBRIS: -
DOES THE STREAM REACH MAXIMUM HIGHWATER ELEV. RAPIDLY? -
IS ORDINARY RISE RAPID? -
IS STAGE AFFECTED BY UPSTREAM OR DOWNSTREAM CONDITIONS? -
IF YES, DESCRIBE:

WATERSHED STORAGE: - HEADWATERS:
UNIFORM: -
IMMEDIATELY ABOVE SITE:

EXISTING STRUCTURE INFORMATION

STRUCTURE TYPE: Single Span Concrete Slab
YEAR BUILT: 1947
CLEAR SPAN(NORMAL TO STREAM): 18 feet
VERTICAL CLEARANCE ABOVE STREAMBED:
WATERWAY OF FULL OPENING:
DISPOSITION OF STRUCTURE: -
TYPE OF MATERIAL UNDER SUBSTRUCTURE: -

WATER SURFACE ELEVATIONS AT:

43% AEP = * VELOCITY = *
10% AEP = * " *
4% AEP = * " *
2% AEP = " *
1% AEP = " *

LONG TERM STREAMBED CHANGES:

IS THE ROADWAY OVERTOPPED BELOW 1% AEP: *
FREQUENCY: *
RELIEF ELEVATION: *
DISCHARGE OVER ROAD @ 1% AEP: *

UPSTREAM STRUCTURE

TOWN: - DISTANCE: -
HIGHWAY # : - STRUCTURE #:
CLEAR SPAN: - CLEAR HEIGHT: -
YEAR BUILT: FULL WATERWAY: -
STRUCTURE TYPE: -

DOWNSTREAM STRUCTURE

TOWN: - DISTANCE: -
HIGHWAY # : - STRUCTURE #:
CLEAR SPAN: - CLEAR HEIGHT: -
YEAR BUILT: FULL WATERWAY: -
STRUCTURE TYPE: -

LRFR LOAD RATING FACTORS

LOADING LEVELS	TRUCK						
	H-20	HL-93	3S2	6 AXLE	3A. STR.	4A. STR.	5A. SEMI
TONNAGE	20	36	36	66	30	34.5	38
INVENTORY							
POSTING							
OPERATING							
COMMENTS:							

PROPOSED STRUCTURE

STRUCTURE TYPE:

CLEAR SPAN(NORMAL TO STREAM):
VERTICAL CLEARANCE ABOVE STREAMBED: -
WATERWAY OF FULL OPENING: -

WATER SURFACE ELEVATIONS AT:

43% AEP = - VELOCITY= -
10% AEP = - " -
4% AEP = - " -
2% AEP = - " -
1% AEP = - " -

IS THE ROADWAY OVERTOPPED BELOW 1% AEP: -
FREQUENCY: -
RELIEF ELEVATION: -
DISCHARGE OVER ROAD @ 1% AEP: -

BRIDGE LOW CHORD ELEVATION: -
FREEBOARD: -

SCOUR: -

REQUIRED CHANNEL PROTECTION: -

PERMIT INFORMATION

AVERAGE DAILY FLOW: - DEPTH OR ELEVATION:
ORDINARY LOW WATER: -
ORDINARY HIGH WATER: -

ADDITIONAL INFORMATION

TRAFFIC MAINTENANCE NOTES

1. MAINTAIN TRAFFIC ON AN OFF SITE DETOUR
2. TRAFFIC SIGNALS ARE NOT NECESSARY.
3. SIDEWALKS ARE NOT NECESSARY.

DESIGN VALUES

1. DESIGN LIVE LOAD		HL-93
2. FUTURE PAVEMENT	d_p:	0.0 INCH
3. DESIGN SPAN	L:	40.66 FT
4. MIN. MID-SPAN POS. CAMBER @ RELEASE (PRESTRESSED UNITS)	Δ:	- - -
5. PRESTRESSING STRAND	f_y:	- - -
6. PRESTRESSED CONCRETE STRENGTH	f'_c:	- - -
7. PRESTRESSED CONCRETE RELEASE STRENGTH	f'_{ci}:	- - -
8. HIGH PERFORMANCE CONCRETE, CLASS PCD	f'_c:	- - -
9. HIGH PERFORMANCE CONCRETE, CLASS PCS	f'_c:	- - -
10. CONCRETE HIGH PERFORMANCE, CLASS SCD	f'_c:	- - -
11. CONCRETE, CLASS C	f'_c:	- - -
12. REINFORCING STEEL	f_y:	- - -
13. STRUCTURAL STEEL AASHTO M270 (WEATHERING)	f_y:	- - -
14. NOMINAL BEARING RESISTANCE OF SOIL	q_n:	- - -
15. SOIL BEARING RESISTANCE FACTOR (REFER TO AASHTO LRFD)	ϕ:	- - -
16. NOMINAL BEARING RESISTANCE OF ROCK	q_n:	- - -
17. ROCK BEARING RESISTANCE FACTOR (REFER TO AASHTO LRFD)	ϕ:	- - -
18. PILE RESISTANCE FACTOR	ϕ:	- - -
19. LATERAL PILE DEFLECTION	Δ:	- - -
20. BASIC WIND SPEED	V_{3s}:	- - -
21. MINIMUM GROUND SNOW LOAD	p_g:	- - -
22. SEISMIC DATA PGA: - - -	S_s:	- - -
	S_1:	- - -
23.		- - -
24.		- - -
25.		- - -
26.		- - -

TRAFFIC DATA

YEAR	AADT	DHV	%D	%T	ADTT
2025	743	200	56	3.5	54
2045	804	210	56	4.9	83

20 year ESAL for flexible pavement from 2025 to 2045 : 320,000
40 year ESAL for flexible pavement from 2025 to 2065 : 701,500
Design Speed: 50 MPH

GREEN

PROJECT NAME: PLYMOUTH
PROJECT NUMBER: ER P23-I(327)

FILE NAME: z23b758frm-env.dgn
PROJECT LEADER: M. CRUZ
DESIGNED BY: M. WOLENSKI
PRELIMINARY INFORMATION SHEET

PLOT DATE: 5/15/2025
DRAWN BY: M. WOLENSKI
CHECKED BY: J. THORNE
SHEET 2 OF 11

GENERAL INFORMATION

SYMBOLOGY LEGEND NOTE

THE SYMBOLOGY ON THIS SHEET IS INTENDED TO COVER STANDARD CONVENTIONAL SYMBOLOGY. THE SYMBOLOGY IS USED FOR EXISTING & PROPOSED FEATURES WITH HEAVIER LINEWEIGHT, IN COMBINATION WITH PROJECT ANNOTATION, AS NOTED ON PROJECT PLAN SHEETS. THIS LEGEND SHEET COVERS THE BASICS. SYMBOLOGY ON PLANS MAY VARY, PLAN ANNOTATIONS AND NOTES SHOULD BE USED TO CLARIFY AS NEEDED.

R.O.W. ABBREVIATIONS (CODES) & SYMBOLS

POINT	CODE	DESCRIPTION
	BF	BARRIER FENCE
	CH	CHANNEL EASEMENT
	CONST	CONSTRUCTION EASEMENT
	CUL	CULVERT EASEMENT
	D&C	DISCONNECT & CONNECT
	DIT	DITCH EASEMENT
	DR	DRAINAGE EASEMENT
	DRIVE	DRIVEWAY EASEMENT
	EC	EROSION CONTROL
	HWY	HIGHWAY EASEMENT
	I&M	INSTALL & MAINTAIN EASEMENT
	LAND	LANDSCAPE EASEMENT
	PDF	PROJECT DEMARCATION FENCE
	R&RES	REMOVE & RESET
	R&REP	REMOVE & REPLACE
	R.T.& I.	RIGHT, TITLE, AND INTEREST
	SR	SLOPE RIGHT
	UE	UTILITY EASEMENT
	(P)	PERMANENT EASEMENT
	(T)	TEMPORARY EASEMENT
■	BNDNS	BOUND SET
⊡	BNDNS	BOUND TO BE SET
◎	IPNF	IRON PIN FOUND
●	IPNS	IRON PIN TO BE SET
⊠	CALC	EXISTING ROW POINT
○	PROW	PROPOSED ROW POINT
[LENGTH]		LENGTH CARRIED ON NEXT SHEET

COMMON TOPOGRAPHIC POINT SYMBOLS

POINT	CODE	DESCRIPTION
	APL	BOUND APPARENT LOCATION
	BM	BENCHMARK
	BND	BOUND
	CB	CATCH BASIN
	COMB	COMBINATION POLE
	DITHR	DROP INLET THROATED DNC
	EL	ELECTRIC POWER POLE
	FPOLE	FLAGPOLE
	GASFIL	GAS FILLER
	GP	GUIDE POST
	GSO	GAS SHUT OFF
	GUY	GUY POLE
	GUYW	GUY WIRE
	GV	GATE VALVE
	H	TREE HARDWOOD
	HCTRL	CONTROL HORIZONTAL
	HVCTRL	CONTROL HORIZ. & VERTICAL
	HYD	HYDRANT
	IP	IRON PIN
	IPIPE	IRON PIPE
	LI	LIGHT - STREET OR YARD
	MB	MAILBOX
	MH	MANHOLE (MH)
	MM	MILE MARKER
	PM	PARKING METER
	PMK	PROJECT MARKER
	POST	POST STONE/WOOD
	RRSIG	RAILROAD SIGNAL
	RRSL	RAILROAD SWITCH LEVER
	S	TREE SOFTWOOD
	SAT	SATELLITE DISH
	SHRUB	SHRUB
	SIGN	SIGN
	STUMP	STUMP
	TEL	TELEPHONE POLE
	TIE	TIE
	TSIGN	SIGN W/DOUBLE POST
	VCTRL	CONTROL VERTICAL
	WELL	WELL
	WSO	WATER SHUT OFF

THESE ARE COMMON VAOT SURVEY POINT SYMBOLS FOR EXISTING FEATURES, ALSO USED FOR PROPOSED FEATURES WITH HEAVIER LINEWEIGHT, IN COMBINATION WITH PROPOSED ANNOTATION.

PROPOSED GEOMETRY CODES

CODE	DESCRIPTION
PC	POINT OF CURVATURE
PI	POINT OF INTERSECTION
CC	CENTER OF CURVE
PT	POINT OF TANGENCY
PCC	POINT OF COMPOUND CURVE
PRC	POINT OF REVERSE CURVE
POB	POINT OF BEGINNING
POE	POINT OF ENDING
STA	STATION PREFIX
AH	AHEAD STATION SUFFIX
BK	BACK STATION SUFFIX
D	CURVE DEGREE OF (100FT)
R	CURVE RADIUS OF
T	CURVE TANGENT LENGTH
L	CURVE LENGTH OF
E	CURVE EXTERNAL DISTANCE
CB	CHORD BEARING

UTILITY SYMBOLOGY

UNDERGROUND UTILITIES

UGU	UTILITY (GENERIC-UNKNOWN)
UT	TELEPHONE
UE	ELECTRIC
UC	CABLE (TV)
UEC	ELECTRIC+CABLE
UET	ELECTRIC+TELEPHONE
UCT	CABLE+TELEPHONE
UECT	ELECTRIC+CABLE+TELEPHONE
G	GAS LINE
W	WATER LINE
S	SANITARY SEWER (SEPTIC)

ABOVE GROUND UTILITIES (AERIAL)

AGU	UTILITY (GENERIC-UNKNOWN)
T	TELEPHONE
E	ELECTRIC
C	CABLE (TV)
EC	ELECTRIC+CABLE
ET	ELECTRIC+TELEPHONE
AER E&T	ELECTRIC+TELEPHONE
CT	CABLE+TELEPHONE
ECT	ELECTRIC+CABLE+TELEPHONE
	UTILITY POLE GUY WIRE

PROJECT CONSTRUCTION SYMBOLOGY

PROJECT DESIGN & LAYOUT SYMBOLOGY

CZ	CLEAR ZONE
	PLAN LAYOUT MATCHLINE

PROJECT CONSTRUCTION FEATURES

	TOP OF CUT SLOPE
	TOE OF FILL SLOPE
	STONE FILL
	BOTTOM OF DITCH ℄
	CULVERT PROPOSED
	STRUCTURE SUBSURFACE
PDF	PROJECT DEMARCATION FENCE
BF	BARRIER FENCE
	TREE PROTECTION ZONE (TPZ)
	STRIPING LINE REMOVAL
	SHEET PILES

CONVENTIONAL BOUNDARY SYMBOLOGY

BOUNDARY LINES

TOWN LINE	TOWN BOUNDARY LINE
COUNTY LINE	COUNTY BOUNDARY LINE
STATE LINE	STATE BOUNDARY LINE
	PROPOSED STATE R.O.W. (LIMITED ACCESS)
	PROPOSED STATE R.O.W.
	STATE ROW (LIMITED ACCESS)
	STATE ROW
	TOWN ROW
	PERMANENT EASEMENT LINE (P)
	TEMPORARY EASEMENT LINE (T)
	SURVEY LINE
P/L	PROPERTY LINE (P/L)
SR	SLOPE RIGHTS
6F	6F PROPERTY BOUNDARY
4F	4F PROPERTY BOUNDARY
HAZ	HAZARDOUS WASTE

EPSC LAYOUT PLAN SYMBOLOGY

EPSC MEASURES

	FILTER CURTAIN
	SILT FENCE
	SILT FENCE WOVEN WIRE
	CHECK DAM
	DISTURBED AREAS REQUIRING RE-VEGETATION
	EROSION MATTING

SEE EPSC DETAIL SHEETS FOR ADDITIONAL SYMBOLOGY

ENVIRONMENTAL RESOURCES

	WETLAND BOUNDARY
	RIPARIAN BUFFER ZONE
	WETLAND BUFFER ZONE
	SOIL TYPE BOUNDARY
T&E	THREATENED & ENDANGERED SPECIES
HAZ	HAZARDOUS WASTE AREA
AG	AGRICULTURAL LAND
HABITAT	FISH & WILDLIFE HABITAT
FLOOD PLAIN	FLOOD PLAIN
OHW	ORDINARY HIGH WATER (OHW)
	STORM WATER
	USDA FOREST SERVICE LANDS
	WILDLIFE HABITAT SUIT/CONN

ARCHEOLOGICAL & HISTORIC

ARCH	ARCHEOLOGICAL BOUNDARY
HISTORIC DIST	HISTORIC DISTRICT BOUNDARY
HISTORIC	HISTORIC AREA
H	HISTORIC STRUCTURE

CONVENTIONAL TOPOGRAPHIC SYMBOLOGY

EXISTING FEATURES

	ROAD EDGE PAVEMENT
	ROAD EDGE GRAVEL
	DRIVEWAY EDGE
	DITCH
	FOUNDATION
	FENCE (EXISTING)
	FENCE WOOD POST
	FENCE STEEL POST
	GARDEN
	ROAD GUARDRAIL
	RAILROAD TRACKS
	CULVERT (EXISTING)
	STONE WALL
	WALL
	WOOD LINE
	BRUSH LINE
	HEDGE
	BODY OF WATER EDGE
	LEDGE EXPOSED

GREEN

PROJECT NAME: PLYMOUTH
PROJECT NUMBER: ER P23-1(327)

FILE NAME: z23b758legend.dgn
PROJECT LEADER: M. CRUZ
DESIGNED BY: E. NOONAN
LEGEND SHEET

PLOT DATE: 5/15/2025
DRAWN BY: C. WEBSTER
CHECKED BY: A. TSOUKALAS
SHEET 3 OF 11

Common Definitions:

Wetland Buffer: upland adjacent to wetland boundary. This should be depicted as a 50' zone immediately adjacent to wetland boundary. This should be only included on VT Wetlands permitting plans.

Ordinary High Water (OHW): 33 CFR 328.3(e) states…"The term ordinary high water mark means that line on the shore established by the fluctuations of water and indicated by physical characteristics such as a clear, natural line impressed on the bank, shelving, changes in the character of soil, destruction of terrestrial vegetation, the presence of litter and debris, or other appropriate means that consider the characteristics of the surrounding areas."

Secondary impacts: areas that have been drained, flooded, cleared, excavated or fragmented. Examples include: habitat fragmentation (disturbance to movement of aquatic wildlife, terrestrial wildlife), hydrology (draining stream with cofferdam), hydrological functions and non-point source impacts.

Temporary impacts: aquatic ecosystem loss as a result of fill placement that will be removed. Examples: stone pad to access piers, construction mats, placement of sandbag cofferdam.

Permanent impacts: aquatic ecosystem loss as a result of fill placement that will not be removed. Examples: stone placement for bank stabilization, pier construction, and scour protection around abutment.

VT IMPACT PERMITING PLAN SYMBOLOGY

OHW IMPACTS

	OHW TEMPORARY	560 SF
	OHW PERMANENT	409 SF
	OHW SECONDARY	N/A

WETLAND IMPACTS

	WETLANDS TEMPORARY	N/A
	WETLANDS PERMANENT	N/A
	WETLANDS SECONDARY	N/A

WETLAND BUFFER IMPACTS (VT ANR ONLY)

	WETLANDS BUFFER TEMPORARY	N/A
	WETLANDS BUFFER PERMANENT	N/A

AREA/BOUNDARY LINESTYLE SYMBOLOGY

	TOTAL IMPACT AREA	N/A
	WETLANDS BUFFER BOUNDARY	N/A
	DEWATERING AREA	N/A

IMPACT PERMITING PLAN SYMBOLOGY

IMPERVIOUS SURFACE IMPACTS

	EXPANSION AREA	759 SF
	REDEVELOPMENT AREA	8,197 SF
	OTHER AREA	1,377 SF
	EXISTING IMPERVIOUS REMOVAL	32 SF

DISTURBANCE AREA IMPACTS

	DISTURBANCE AREA	21,513 SF

FLOOD HAZARD & RIVER CORRIDOR IMPACTS

	100-YEAR FLOODPLAIN	N/A
	FLOODPLAIN IMPACT AREA	0 SF
	RIVER CORRIDOR IMPACT AREA	16,295 SF

GREEN

PROJECT NAME: PLYMOUTH	
PROJECT NUMBER: ER P23-1(327)	
FILE NAME: z23d758legend-env.dgn	PLOT DATE: 5/15/2025
PROJECT LEADER: M. CRUZ	DRAWN BY: M. WOLENSKI
DESIGNED BY: M. WOLENSKI	CHECKED BY: J. THORNE
ENVIRONMENTAL SYMBOLOGY AND LEGEND	SHEET 4 OF 11

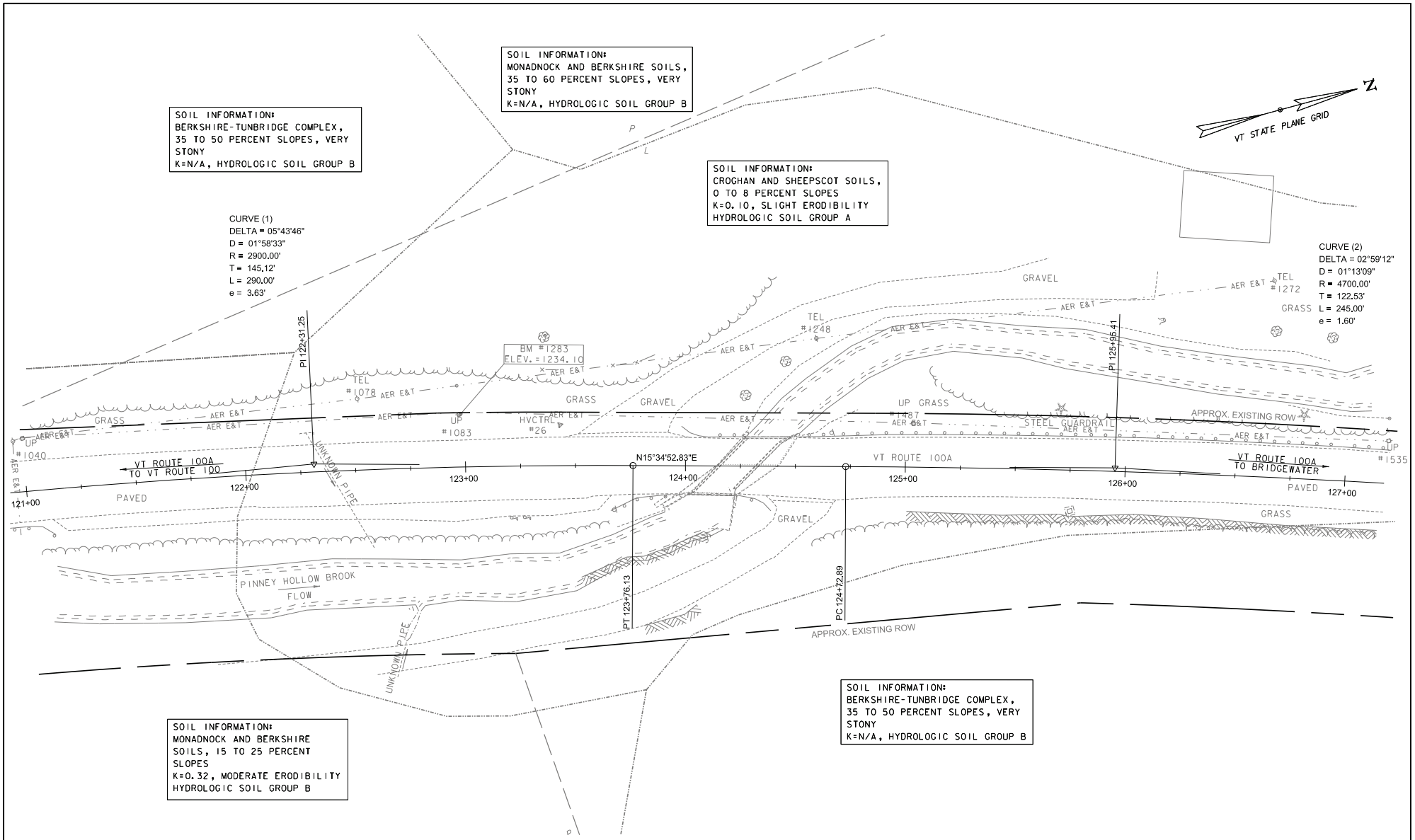

0 20 40
SCALE IN FEET

GREEN

PROJECT NAME: PLYMOUTH	
PROJECT NUMBER: ER P23-1(327)	
FILE NAME: z23b758existingconditions.dgn	PLOT DATE: 5/15/2025
PROJECT LEADER: M. CRUZ	DRAWN BY: M. WOLENSKI
DESIGNED BY: M. WOLENSKI	CHECKED BY: J. THORNE
EXISTING CONDITIONS	SHEET 5 OF 11

LEGEND - EARTH DISTURBANCE PLAN

—OHW— ORDINARY HIGH WATER

DISTURBANCE AREA

ABUTMENT 1	= 10,564 SF
ABUTMENT 2	= 10,950 SF
TOTAL	= 21,513 SF (0.494 ACRES)

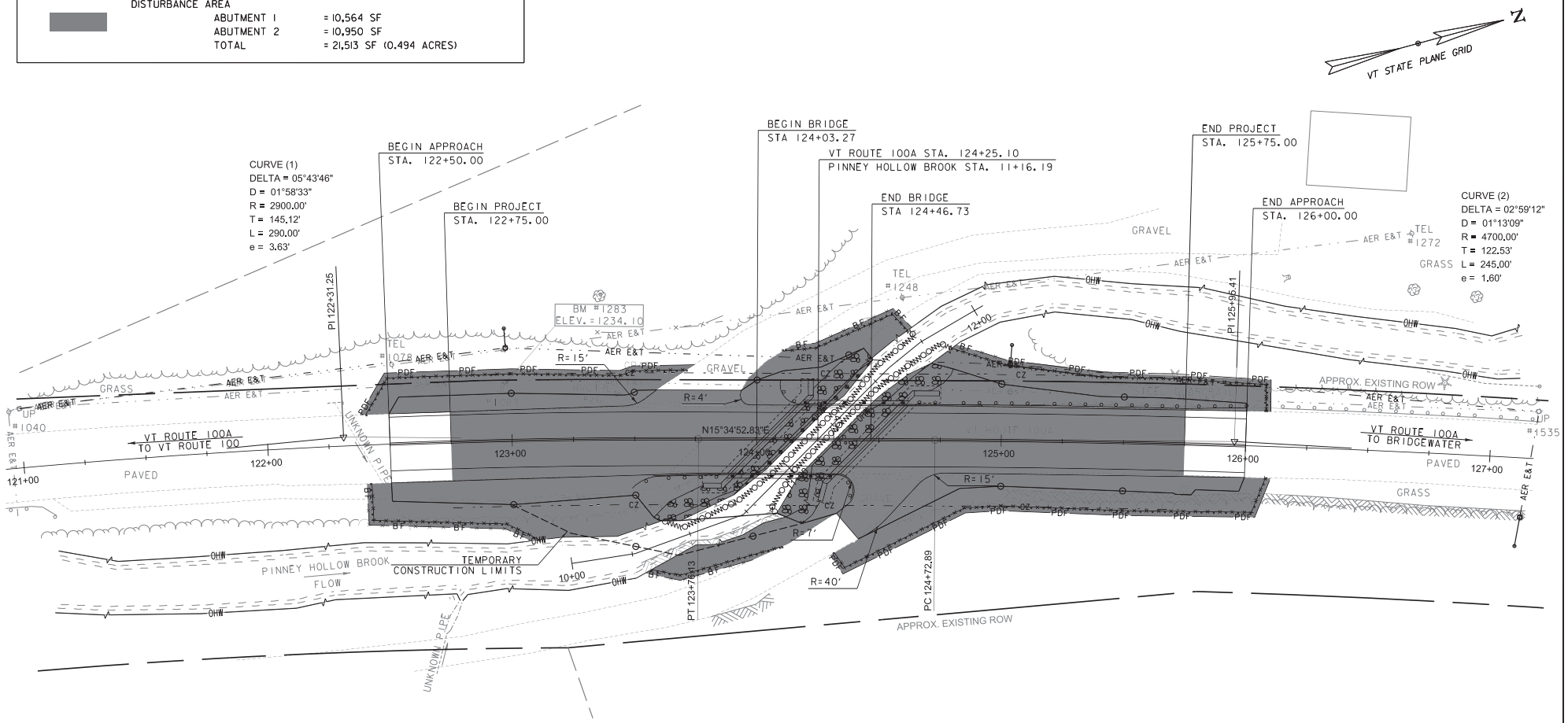

0 20 40
SCALE IN FEET

GREEN

PROJECT NAME: PLYMOUTH	
PROJECT NUMBER: ER P23-1(327)	
FILE NAME: z23b758earthdist.dgn	PLOT DATE: 5/15/2025
PROJECT LEADER: M. CRUZ	DRAWN BY: M. WOLENSKI
DESIGNED BY: M. WOLENSKI	CHECKED BY: J. THORNE
EARTH DISTURBANCE PLAN	SHEET 6 OF 11

LEGEND - IMPERVIOUS SURFACES

EXPANSION AREA		**OTHER AREA**	
BEGIN PROJECT	= 238 SF	ABUTMENT 1	= 704 SF
END PROJECT	= 521 SF	ABUTMENT 2	= 674 SF
TOTAL	= 759 SF	TOTAL	= 1,377 SF
REDEVELOPMENT AREA		**EXISTING IMPERVIOUS REMOVAL**	
AREA	= 8,197 SF	ABUTMNET 1	= 3 SF
TOTAL	= 8,197 SF	ABUTMENT 2	= 28 SF
		TOTAL	= 32 SF

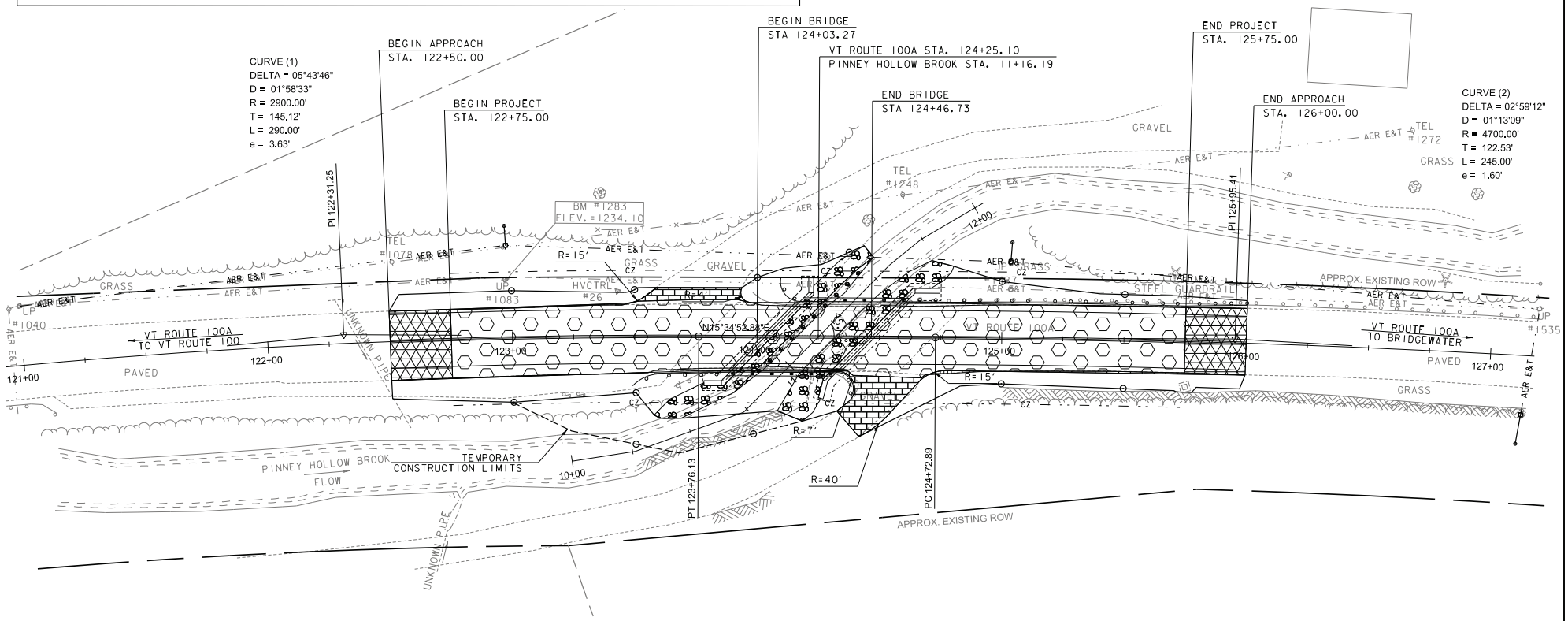

0 20 40
SCALE IN FEET

GREEN

PROJECT NAME: PLYMOUTH	
PROJECT NUMBER: ER P23-1(327)	
FILE NAME: z23b758Impervioussurfaces.dgn	PLOT DATE: 5/15/2025
PROJECT LEADER: M. CRUZ	DRAWN BY: M. WOLENSKI
DESIGNED BY: M. WOLENSKI	CHECKED BY: J. THORNE
IMPERVIOUS SURFACES	SHEET 7 OF 11

LEGEND - FLOOD HAZARD AND RIVER CORRIDOR PLAN

- 100-YEAR FLOODPLAIN - (NO 100-YEAR FLOODPLAIN FOR PINNEY HOLLOW BROOK)
- FLOODPLAIN IMPACT AREA = 0 SF
- RIVER CORRIDOR IMPACT AREA = 16,295 SF

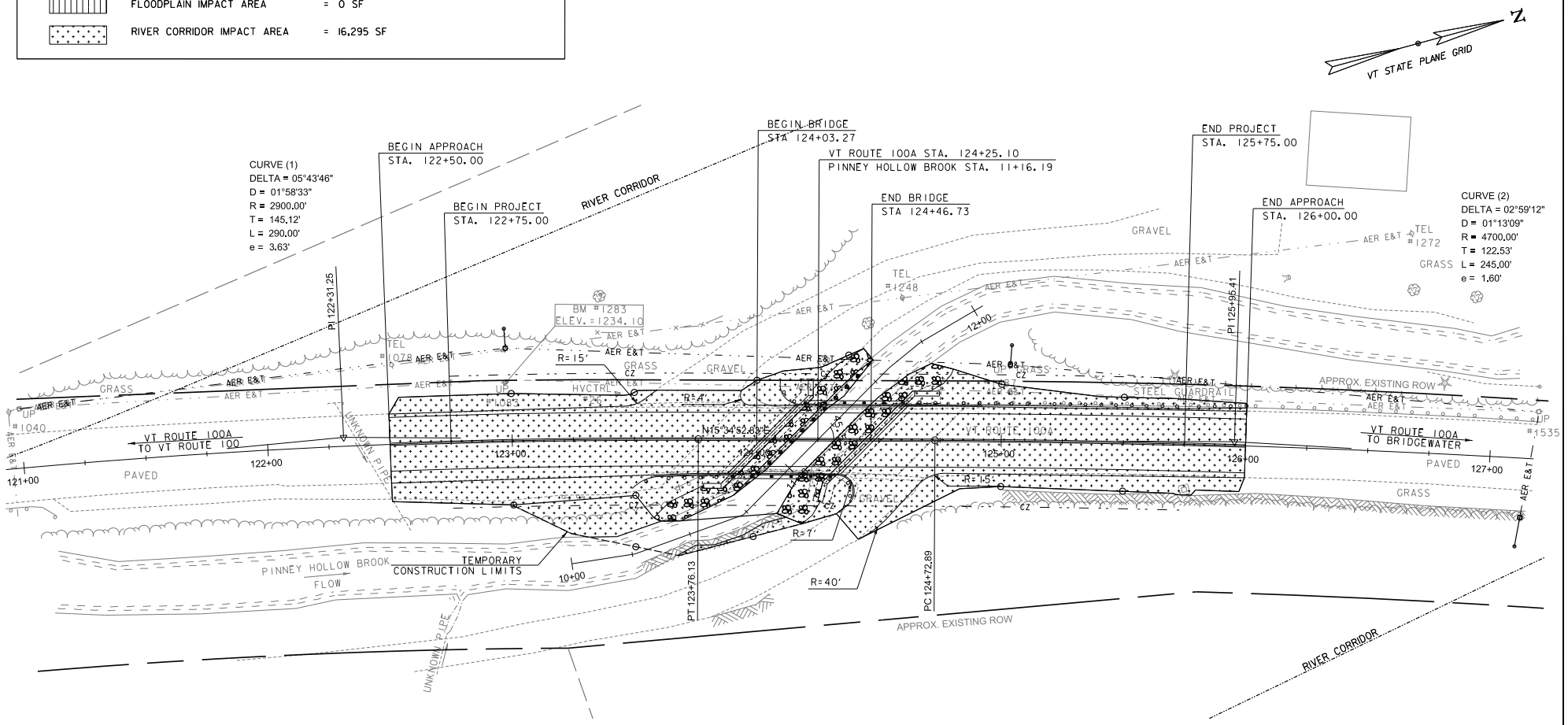

0 20 40
SCALE IN FEET

GREEN

PROJECT NAME: PLYMOUTH	
PROJECT NUMBER: ER P23-1(327)	
FILE NAME: z23b758floodhazard.dgn	PLOT DATE: 5/15/2025
PROJECT LEADER: M. CRUZ	DRAWN BY: M. WOLENSKI
DESIGNED BY: M. WOLENSKI	CHECKED BY: J. THORNE
FLOOD HAZARD AND RIVER CORRIDOR PLAN	SHEET 8 OF 11

LEGEND - ACOE PLAN

- 100-YEAR FLOODPLAIN - (NO 100-YEAR FLOODPLAIN FOR PINNEY HOLLOW BROOK)
- OHW — ORDINARY HIGH WATER
- TEMPORARY ORDINARY HIGH WATER IMPACT
  - TOTAL AREA = 560 SF
  - FILL VOLUME = 1,041 CF
- PERMANENT ORDINARY HIGH WATER IMPACT
  - TOTAL AREA = 409 SF
  - FILL VOLUME = 1,364 CF

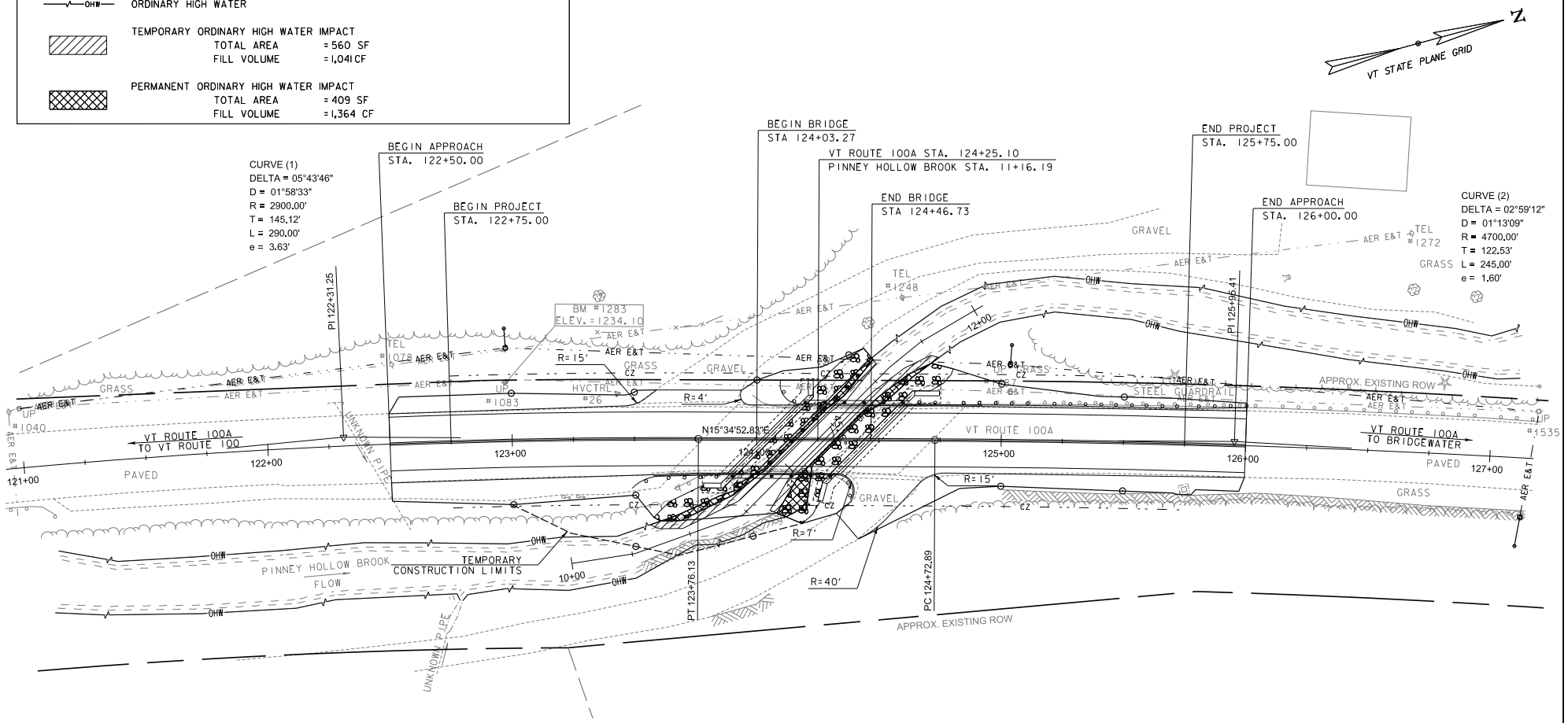

0 20 40
SCALE IN FEET

GREEN

PROJECT NAME: PLYMOUTH	
PROJECT NUMBER: ER P23-1(327)	
FILE NAME: z23b758acoe.dgn	PLOT DATE: 5/15/2025
PROJECT LEADER: M. CRUZ	DRAWN BY: M. WOLENSKI
DESIGNED BY: M. WOLENSKI	CHECKED BY: J. THORNE
ACOE PLAN	SHEET 9 OF 11

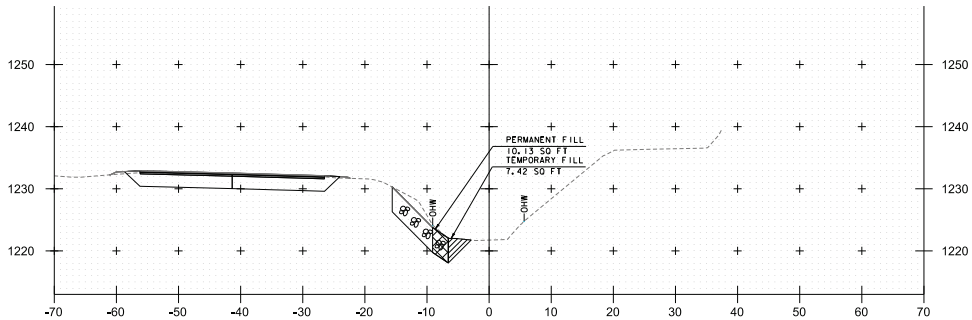

10+50

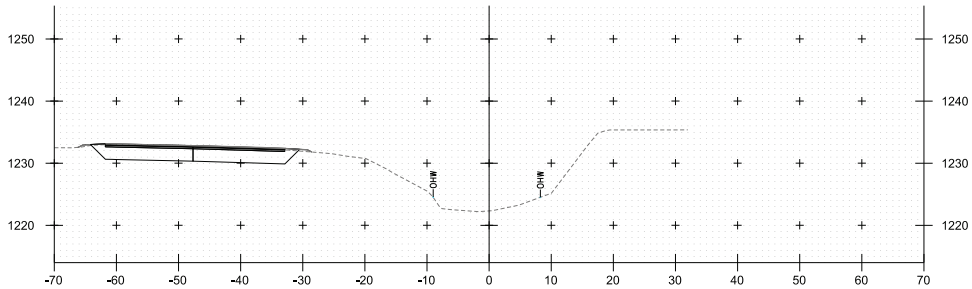

10+25

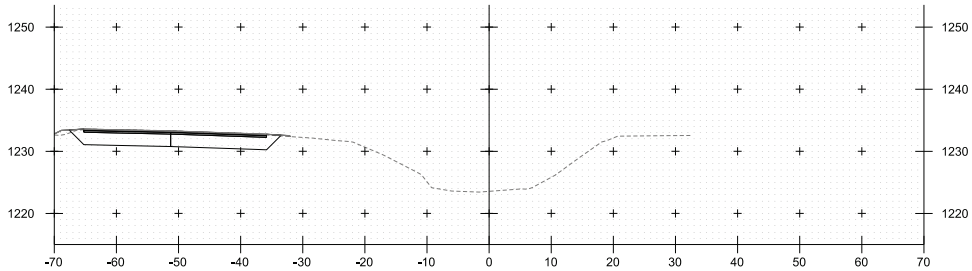

10+00

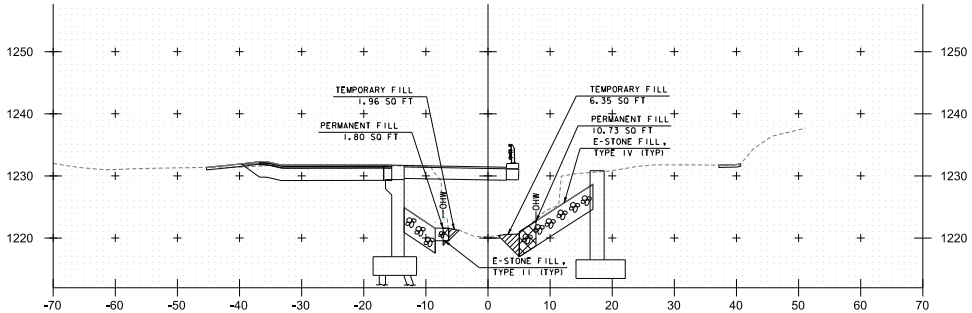

11+00

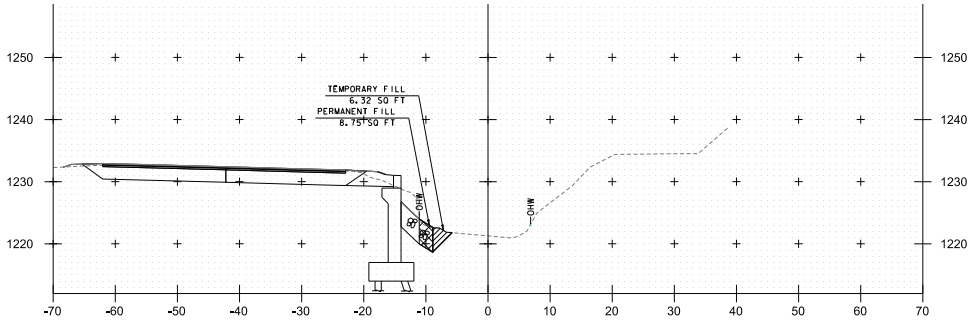

10+75

PROJECT NAME: PLYMOUTH	
PROJECT NUMBER: ER P23-1(327)	
FILE NAME: z23b758xs_copy 2025.05.15.dgn	PLOT DATE: 5/15/2025
PROJECT LEADER: M. CRUZ	DRAWN BY: M. WOLENSKI
DESIGNED BY: M. WOLENSKI	CHECKED BY: J. THORNE
ACOE CHANNEL CROSS SECTIONS SHEET 1	SHEET 10 OF 11

GREEN

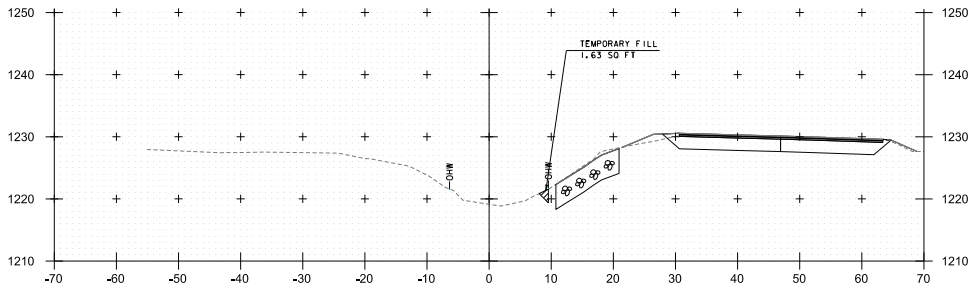

11+75

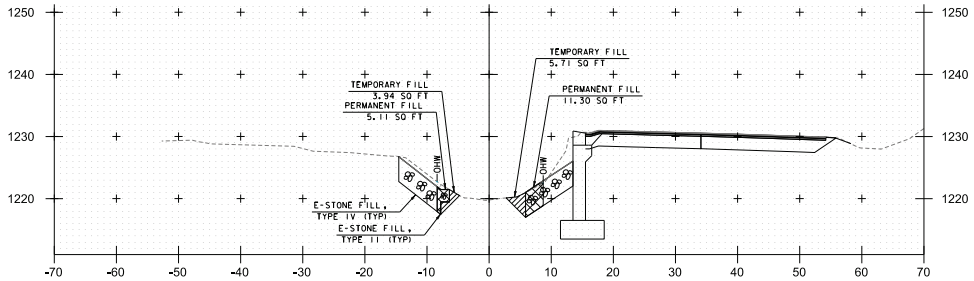

11+50

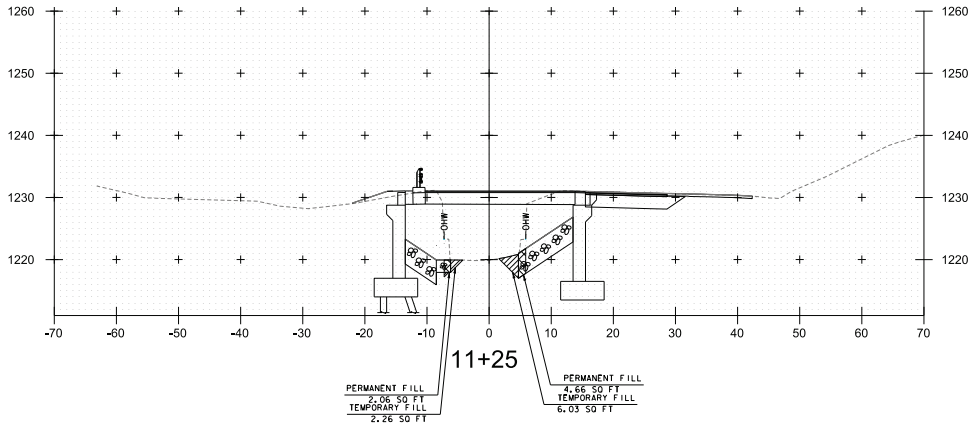

11+25

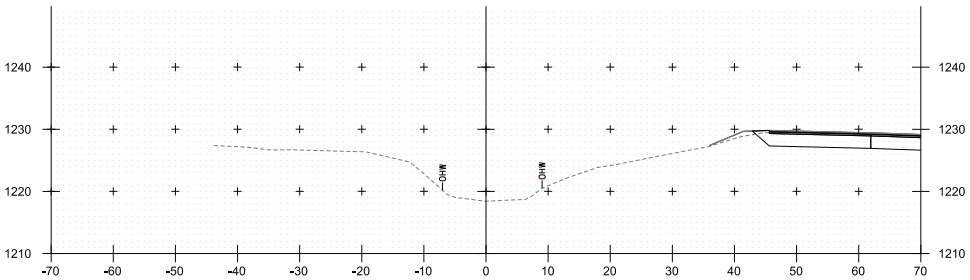

12+00

PROJECT NAME: PLYMOUTH	
PROJECT NUMBER: ER P23-1(327)	
FILE NAME: z23b758xs_copy 2025.05.15.dgn	PLOT DATE: 5/15/2025
PROJECT LEADER: M. CRUZ	DRAWN BY: M. WOLENSKI
DESIGNED BY: M. WOLENSKI	CHECKED BY: J. THORNE
ACOE CHANNEL CROSS SECTIONS SHEET 2	SHEET 11 OF 11

GREEN

REVIEWER NOTES:

1. FULL ROADWAY CLOSURE IS ANTICIPATED TO REPLACE THE EXISTING BRIDGE. TRAFFIC IS EXPECTED TO BE HANDLED WITH AN OFFSITE DETOUR.
2. TEMPORARY RELOCATION OF STREAM IS ANTICIPATED DURING CONSTRUCTION OF THE BRIDGE.
3. TEMPORARY RIGHT OF WAY FOR CONSTRUCTION ACCESS IS ANTICIPATED.
4. AERIAL UTILITY RELOCATION IS PROPOSED FOR CONSTRUCTION.
5. EPSC = LOW RISK SITE

STATE OF VERMONT
AGENCY OF TRANSPORTATION

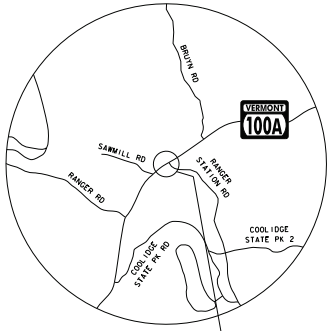

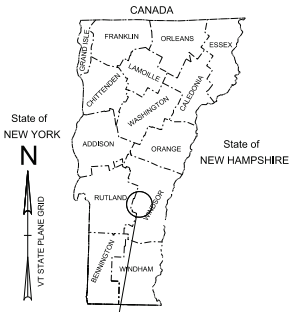

PLYMOUTH ER P23-1 (328)
VT 100A BRIDGE 7

PROPOSED IMPROVEMENT
BRIDGE PROJECT
TOWN OF PLYMOUTH
COUNTY OF WINDSOR
VT ROUTE 100A BRIDGE 7 (MAJOR COLLECTOR)

PROJECT LOCATION: IN THE TOWN OF PLYMOUTH ON VT ROUTE 100A APPROXIMATELY 3.74 MILES SOUTHWEST OF THE INTERSECTION WITH US ROUTE 4.

PROJECT DESCRIPTION: REPLACEMENT OF BRIDGE 7 OVER PINNEY HOLLOW BROOK WITH APPROACH ROADWAY AND RELATED CHANNEL WORK.

LENGTH OF STRUCTURE:	54.37 FEET
LENGTH OF ROADWAY:	360.00 FEET
LENGTH OF PROJECT:	410.00 FEET

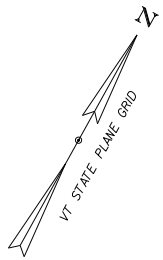

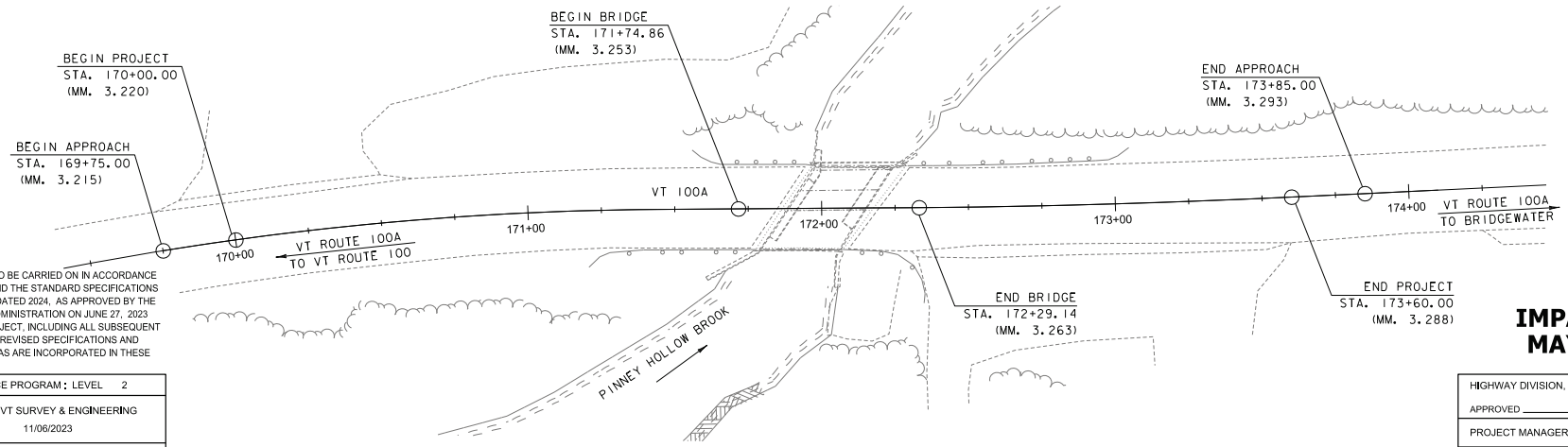

CONSTRUCTION IS TO BE CARRIED ON IN ACCORDANCE WITH THESE PLANS AND THE STANDARD SPECIFICATIONS FOR CONSTRUCTION DATED 2024, AS APPROVED BY THE FEDERAL HIGHWAY ADMINISTRATION ON JUNE 27, 2023 FOR USE ON THIS PROJECT, INCLUDING ALL SUBSEQUENT REVISIONS AND SUCH REVISED SPECIFICATIONS AND SPECIAL PROVISIONS AS ARE INCORPORATED IN THESE PLANS.

IMPACT PLANS
MAY 15, 2025

QUALITY ASSURANCE PROGRAM: LEVEL 2

SURVEYED BY: VT SURVEY & ENGINEERING
SURVEYED DATE: 11/06/2023

DATUM
VERTICAL NAVD88
HORIZONTAL NAD83(2011)

HIGHWAY DIVISION, CHIEF ENGINEER
APPROVED _____ DATE _____

PROJECT MANAGER: ROBERT S. YOUNG, P.E.

PROJECT NAME: PLYMOUTH
PROJECT NUMBER: ER P23-1 (328)

SHEET 1 OF 12 SHEETS

STATE OF VERMONT
AGENCY OF TRANSPORTATION

PRELIMINARY INFORMATION SHEET (BRIDGE)

Version 20213.05.16.13

INDEX OF SHEETS

PLAN SHEETS

1	TITLE SHEET
2	PRELIMINARY INFORMATION SHEET
3	CONVENTIONAL SYMBOLOGY & LEGEND SHEET
4	ENVIRONMENTAL SYMBOLOGY & LEGEND
5	EXISTING CONDITIONS
6	EARTH DISTURBANCE PLAN
7	IMPERVIOUS SURFACES
8	FLOOD HAZARD & RIVER CORRIDOR PLAN
9	ACOE PLAN
10-11	CHANNEL CROSS SECTION SHEETS

HIGHWAY SAFETY AND DESIGN DETAILS

HSD-621.01	POST AND BLOCKOUT DETAILS FOR STEEL BEAM GUARDRAIL, GALVANIZE	06/09/2015
HSD-621.06	MISCELLANEOUS GUARDRAIL DETAILS	02/27/2017
HSD-621.07A	MIDWEST GUARDRAIL SYSTEM (MGS)	01/04/2021
HSD-621.07B	W-BEAM GUARDRAIL COMPONENTS	04/17/2019
HSD-621.07C	MIDWEST GUARDRAIL SYSTEM (MGS) ANCHOR	04/17/2019
HSD-621.07D	MIDWEST GUARDRAIL SYSTEM (MGS) ANCHOR COMPONENTS	04/17/2019
HSD-621.07E	MIDWEST GUARDRAIL SYSTEM (MGS) ANCHOR COMPONENTS	04/17/2019
HSD-621.07F	MIDWEST GUARDRAIL SYSTEM TRANSITION SECTION	01/04/2021

STANDARDS LIST

B-5	SLOPE GRADING, EMBANKMENTS, MUCK	06-01-1994
C-10	CURBING	02-17-2022
E-10	ROLLED EROSION CONTROL PRODUCT, TYPE I	04-07-2020
E-12	STABILIZED CONSTRUCTION ENTRANCE	04-07-2020
E-15	SILT FENCE	04-07-2020
E-121	STANDARD SIGN PLACEMENT - CONVENTIONAL ROAD	08-08-1995
E-193	PAVEMENT MARKING DETAILS	08-18-1995
G-1	STEEL BEAM GUARDRAIL DETAILS (POST, DELINEATOR, TYPICALS)	03-10-2017
G-1D	STEEL BEAM GUARDRAIL DETAILS (END TERMINAL, ANCHOR, MEDIAN)	03-10-2017
G-16	STEEL BEAM GUARDRAIL ATTACHMENTS TO EXISTING BRIDGE, TERMINAL	10-02-2018
G-19	GENERIC GRADING PLANS FOR GUARDRAIL END TERMINALS	10-02-2018
J-1	PROJECT AND BOUNDARY MARKERS	06-01-1994
S-361A	BRIDGE RAILING, GALVANIZED 3 RAIL BOX BEAM	06-26-2024
S-361B	BRIDGE RAILING, GALVANIZED 3 RAIL BOX BEAM	02-15-2023
S-361C	GUARDRAIL APPROACH SECTION, GALVANIZED 3 RAIL BOX BEAM	02-15-2023
S-363	THRIE BEAM TO STANDARD STEEL BEAM TRANSITION SECTION	02-15-2023
S-400	BRIDGE JOINT ASPHALTIC PLUG	04-07-2020
S-500	CONCRETE DETAILS AND NOTES	02-15-2023
S-501	CONCRETE DETAILS AND NOTES	02-15-2023
T-1	TRAFFIC CONTROL GENERAL NOTES	04-25-2016
T-2	TRAFFIC SIGN GENERAL NOTES	04-07-2020
T-10	CONVENTIONAL ROADS CONSTRUCTION APPROACH SIGNING	08-05-2012
T-17	TRAFFIC CONTROL MISCELLANEOUS DETAILS	08-05-2012
T-24	TRAFFIC CONTROL FOR MAINTENANCE PAVEMENT MARKING OPERATION	08-05-2012
T-28	CONSTRUCTION SIGN DETAILS	08-05-2012
T-29	CONSTRUCTION SIGN DETAILS	08-05-2012
T-30	CONSTRUCTION SIGN DETAILS	02-17-2022
T-31	CONSTRUCTION SIGN DETAILS	08-05-2012
T-35	CONSTRUCTION ZONE LONGITUDINAL DROP-OFFS	08-05-2012
T-36	CONSTRUCTION ZONE LONGITUDINAL DROP-OFFS FOR PAVING	08-05-2012
T-40	DELINEATORS AND MILEPOSTS	01-02-2013
T-42	BRIDGE NUMBER PLAQUE	04-09-2014
T-45	SQUARE TUBE SIGN POST AND ANCHOR	01-02-2013
T-56	STANDARD SIGN PLACEMENT	10-26-2015

FINAL HYDRAULIC REPORT

HYDROLOGIC DATA

Date:

DRAINAGE AREA: -
CHARACTER OF TERRAIN: -
STREAM CHARACTERISTICS: -
NATURE OF STREAMBED: -

PEAK FLOW DATA - ANNUAL EXCEEDANCE PROBABILITY (AEP)

43% = - 2% = -
10% = - 1% = -
4% = - 0.2% = -

DATE OF FLOOD OF RECORD: -
ESTIMATED DISCHARGE: -
WATER SURFACE ELEV.: -
NATURAL STREAM VELOCITY: -
ICE CONDITIONS: -
DEBRIS: -
DOES THE STREAM REACH MAXIMUM HIGHWATER ELEV. RAPIDLY? -
IS ORDINARY RISE RAPID? -
IS STAGE AFFECTED BY UPSTREAM OR DOWNSTREAM CONDITIONS? -
IF YES, DESCRIBE:

WATERSHED STORAGE: - HEADWATERS:
UNIFORM: -
IMMEDIATELY ABOVE SITE:

EXISTING STRUCTURE INFORMATION

STRUCTURE TYPE: Single Span
YEAR BUILT: 1947
CLEAR SPAN(NORMAL TO STREAM): 28 feet
VERTICAL CLEARANCE ABOVE STREAMBED:
WATERWAY OF FULL OPENING:
DISPOSITION OF STRUCTURE: -
TYPE OF MATERIAL UNDER SUBSTRUCTURE: -

WATER SURFACE ELEVATIONS AT:

43% AEP = * VELOCITY = *
10% AEP = * " *
4% AEP = * " *
2% AEP = " *
1% AEP = " *

LONG TERM STREAMBED CHANGES:

IS THE ROADWAY OVERTOPPED BELOW 1% AEP: *
FREQUENCY: *
RELIEF ELEVATION: *
DISCHARGE OVER ROAD @ 1% AEP: *

UPSTREAM STRUCTURE

TOWN: - DISTANCE: -
HIGHWAY #: - STRUCTURE #: -
CLEAR SPAN: - CLEAR HEIGHT: -
YEAR BUILT: FULL WATERWAY: -
STRUCTURE TYPE: -

DOWNSTREAM STRUCTURE

TOWN: - DISTANCE: -
HIGHWAY #: - STRUCTURE #: -
CLEAR SPAN: - CLEAR HEIGHT: -
YEAR BUILT: FULL WATERWAY: -
STRUCTURE TYPE: -

PROPOSED STRUCTURE

STRUCTURE TYPE: Single Span

CLEAR SPAN(NORMAL TO STREAM): 41 feet
VERTICAL CLEARANCE ABOVE STREAMBED: -
WATERWAY OF FULL OPENING: -

WATER SURFACE ELEVATIONS AT:

43% AEP = - VELOCITY= -
10% AEP = - " -
4% AEP = - " -
2% AEP = - " -
1% AEP = - " -

IS THE ROADWAY OVERTOPPED BELOW 1% AEP: -
FREQUENCY: -
RELIEF ELEVATION: -
DISCHARGE OVER ROAD @ 1% AEP: -

BRIDGE LOW CHORD ELEVATION: -
FREEBOARD: -

SCOUR: -

REQUIRED CHANNEL PROTECTION: -

PERMIT INFORMATION

AVERAGE DAILY FLOW: - DEPTH OR ELEVATION:
ORDINARY LOW WATER: -
ORDINARY HIGH WATER: -

ADDITIONAL INFORMATION

TRAFFIC MAINTENANCE NOTES

1. MAINTAIN TRAFFIC ON AN OFF SITE DETOUR
2. TRAFFIC SIGNALS ARE NOT NECESSARY.
3. SIDEWALKS ARE NOT NECESSARY.

DESIGN VALUES

1. DESIGN LIVE LOAD		HL-93
2. FUTURE PAVEMENT	d_p:	0.0 INCH
3. DESIGN SPAN	L:	40.66 FT
4. MIN. MID-SPAN POS. CAMBER @ RELEASE (PRESTRESSED UNITS)	Δ:	---
5. PRESTRESSING STRAND	f_y:	---
6. PRESTRESSED CONCRETE STRENGTH	f'_c:	---
7. PRESTRESSED CONCRETE RELEASE STRENGTH	f'_{ci}:	---
8. HIGH PERFORMANCE CONCRETE, CLASS PCD	f'_c:	---
9. HIGH PERFORMANCE CONCRETE, CLASS PCS	f'_c:	---
10. CONCRETE HIGH PERFORMANCE, CLASS SCC	f'_c:	---
11. CONCRETE, CLASS C	f'_c:	---
12. REINFORCING STEEL	f_y:	---
13. STRUCTURAL STEEL AASHTO M270 (WEATHERING)	f_y:	---
14. NOMINAL BEARING RESISTANCE OF SOIL	q_n:	---
15. SOIL BEARING RESISTANCE FACTOR (REFER TO AASHTO LRFD)	ϕ:	---
16. NOMINAL BEARING RESISTANCE OF ROCK	q_n:	---
17. ROCK BEARING RESISTANCE FACTOR (REFER TO AASHTO LRFD)	ϕ:	---
18. PILE RESISTANCE FACTOR	ϕ:	---
19. LATERAL PILE DEFLECTION	Δ:	---
20. BASIC WIND SPEED	V_{30}:	---
21. MINIMUM GROUND SNOW LOAD	p_g:	---
22. SEISMIC DATA PGA: ---	S_s:	---
	S_1:	---
23.		
24.		---
25.		---
26.		---

LRFR LOAD RATING FACTORS

LOADING LEVELS	TRUCK						
	H-20	HL-93	3S2	6 AXLE	3A. STR.	4A. STR.	5A SEMI
TONNAGE	20	36	36	66	30	34.5	38
INVENTORY							
POSTING							
OPERATING							
COMMENTS:							

TRAFFIC DATA

YEAR	AADT	DHV	%D	%T	ADTT
2025	743	200	56	3.5	54
2045	804	210	56	4.9	83

20 year ESAL for flexible pavement from 2025 to 2045 : 320,000
40 year ESAL for flexible pavement from 2025 to 2065 : 701,500
Design Speed: 50 MPH

GREEN

PROJECT NAME: PLYMOUTH
PROJECT NUMBER: ER P23-1(328)

FILE NAME: z23b755frm-env.dgn PLOT DATE: 5/15/2025
PROJECT LEADER: M. CRUZ DRAWN BY: C. WEBSTER
DESIGNED BY: V. PALMA CHECKED BY: J. THORNE
PRELIMINARY INFORMATION SHEET SHEET 2 OF 12

GENERAL INFORMATION

SYMBOLOGY LEGEND NOTE

THE SYMBOLOGY ON THIS SHEET IS INTENDED TO COVER STANDARD CONVENTIONAL SYMBOLOGY. THE SYMBOLOGY IS USED FOR EXISTING & PROPOSED FEATURES WITH HEAVIER LINEWEIGHT, IN COMBINATION WITH PROJECT ANNOTATION, AS NOTED ON PROJECT PLAN SHEETS. THIS LEGEND SHEET COVERS THE BASICS. SYMBOLOGY ON PLANS MAY VARY, PLAN ANNOTATIONS AND NOTES SHOULD BE USED TO CLARIFY AS NEEDED.

R.O.W. ABBREVIATIONS (CODES) & SYMBOLS

POINT	CODE	DESCRIPTION
	BF	BARRIER FENCE
	CH	CHANNEL EASEMENT
	CONST	CONSTRUCTION EASEMENT
	CUL	CULVERT EASEMENT
	D&C	DISCONNECT & CONNECT
	DIT	DITCH EASEMENT
	DR	DRAINAGE EASEMENT
	DRIVE	DRIVEWAY EASEMENT
	EC	EROSION CONTROL
	HWY	HIGHWAY EASEMENT
	I&M	INSTALL & MAINTAIN EASEMENT
	LAND	LANDSCAPE EASEMENT
	PDF	PROJECT DEMARCATION FENCE
	R&RES	REMOVE & RESET
	R&REP	REMOVE & REPLACE
	R.T.& I.	RIGHT, TITLE, AND INTEREST
	SR	SLOPE RIGHT
	UE	UTILITY EASEMENT
	(P)	PERMANENT EASEMENT
	(T)	TEMPORARY EASEMENT
■	BNDNS	BOUND SET
⊡	BNDNS	BOUND TO BE SET
◎	IPNF	IRON PIN FOUND
●	IPNS	IRON PIN TO BE SET
⊠	CALC	EXISTING ROW POINT
○	PROW	PROPOSED ROW POINT
[LENGTH]		LENGTH CARRIED ON NEXT SHEET

COMMON TOPOGRAPHIC POINT SYMBOLS

POINT	CODE	DESCRIPTION
	APL	BOUND APPARENT LOCATION
	BM	BENCHMARK
	BND	BOUND
	CB	CATCH BASIN
	COMB	COMBINATION POLE
	DITHR	DROP INLET THROATED DNC
	EL	ELECTRIC POWER POLE
	FPOLE	FLAGPOLE
	GASFIL	GAS FILLER
	GP	GUIDE POST
	GSO	GAS SHUT OFF
	GUY	GUY POLE
	GUYW	GUY WIRE
	GV	GATE VALVE
	H	TREE HARDWOOD
	HCTRL	CONTROL HORIZONTAL
	HVCTRL	CONTROL HORIZ. & VERTICAL
	HYD	HYDRANT
	IP	IRON PIN
	IPIPE	IRON PIPE
	LI	LIGHT - STREET OR YARD
	MB	MAILBOX
	MH	MANHOLE (MH)
	MM	MILE MARKER
	PM	PARKING METER
	PMK	PROJECT MARKER
	POST	POST STONE/WOOD
	RRSIG	RAILROAD SIGNAL
	RRSL	RAILROAD SWITCH LEVER
	S	TREE SOFTWOOD
	SAT	SATELLITE DISH
	SHRUB	SHRUB
	SIGN	SIGN
	STUMP	STUMP
	TEL	TELEPHONE POLE
	TIE	TIE
	TSIGN	SIGN W/DOUBLE POST
	VCTRL	CONTROL VERTICAL
	WELL	WELL
	WSO	WATER SHUT OFF

THESE ARE COMMON VAOT SURVEY POINT SYMBOLS FOR EXISTING FEATURES, ALSO USED FOR PROPOSED FEATURES WITH HEAVIER LINEWEIGHT, IN COMBINATION WITH PROPOSED ANNOTATION.

PROPOSED GEOMETRY CODES

CODE	DESCRIPTION
PC	POINT OF CURVATURE
PI	POINT OF INTERSECTION
CC	CENTER OF CURVE
PT	POINT OF TANGENCY
PCC	POINT OF COMPOUND CURVE
PRC	POINT OF REVERSE CURVE
POB	POINT OF BEGINNING
POE	POINT OF ENDING
STA	STATION PREFIX
AH	AHEAD STATION SUFFIX
BK	BACK STATION SUFFIX
D	CURVE DEGREE OF (100FT)
R	CURVE RADIUS OF
T	CURVE TANGENT LENGTH
L	CURVE LENGTH OF
E	CURVE EXTERNAL DISTANCE
CB	CHORD BEARING

UTILITY SYMBOLOGY

UNDERGROUND UTILITIES

UGU	UTILITY (GENERIC-UNKNOWN)
UT	TELEPHONE
UE	ELECTRIC
UC	CABLE (TV)
UEC	ELECTRIC+CABLE
UET	ELECTRIC+TELEPHONE
UCT	CABLE+TELEPHONE
UECT	ELECTRIC+CABLE+TELEPHONE
G	GAS LINE
W	WATER LINE
S	SANITARY SEWER (SEPTIC)

ABOVE GROUND UTILITIES (AERIAL)

AGU	UTILITY (GENERIC-UNKNOWN)
T	TELEPHONE
E	ELECTRIC
C	CABLE (TV)
EC	ELECTRIC+CABLE
ET	ELECTRIC+TELEPHONE
AER E&T	ELECTRIC+TELEPHONE
CT	CABLE+TELEPHONE
ECT	ELECTRIC+CABLE+TELEPHONE
	UTILITY POLE GUY WIRE

PROJECT CONSTRUCTION SYMBOLOGY

PROJECT DESIGN & LAYOUT SYMBOLOGY

CZ	CLEAR ZONE
	PLAN LAYOUT MATCHLINE

PROJECT CONSTRUCTION FEATURES

	TOP OF CUT SLOPE
	TOE OF FILL SLOPE
	STONE FILL
	BOTTOM OF DITCH ℄
	CULVERT PROPOSED
	STRUCTURE SUBSURFACE
PDF	PROJECT DEMARCATION FENCE
BF	BARRIER FENCE
	TREE PROTECTION ZONE (TPZ)
	STRIPING LINE REMOVAL
	SHEET PILES

CONVENTIONAL BOUNDARY SYMBOLOGY

BOUNDARY LINES

TOWN LINE	TOWN BOUNDARY LINE
COUNTY LINE	COUNTY BOUNDARY LINE
STATE LINE	STATE BOUNDARY LINE
	PROPOSED STATE R.O.W. (LIMITED ACCESS)
	PROPOSED STATE R.O.W.
	STATE ROW (LIMITED ACCESS)
	STATE ROW
	TOWN ROW
	PERMANENT EASEMENT LINE (P)
	TEMPORARY EASEMENT LINE (T)
	SURVEY LINE
P/L	PROPERTY LINE (P/L)
SR	SLOPE RIGHTS
6F	6F PROPERTY BOUNDARY
4F	4F PROPERTY BOUNDARY
HAZ	HAZARDOUS WASTE

EPSC LAYOUT PLAN SYMBOLOGY

EPSC MEASURES

	FILTER CURTAIN
	SILT FENCE
	SILT FENCE WOVEN WIRE
	CHECK DAM
	DISTURBED AREAS REQUIRING RE-VEGETATION
	EROSION MATTING

SEE EPSC DETAIL SHEETS FOR ADDITIONAL SYMBOLOGY

ENVIRONMENTAL RESOURCES

	WETLAND BOUNDARY
	RIPARIAN BUFFER ZONE
	WETLAND BUFFER ZONE
	SOIL TYPE BOUNDARY
T&E	THREATENED & ENDANGERED SPECIES
HAZ	HAZARDOUS WASTE AREA
AG	AGRICULTURAL LAND
HABITAT	FISH & WILDLIFE HABITAT
FLOOD PLAIN	FLOOD PLAIN
OHW	ORDINARY HIGH WATER (OHW)
	STORM WATER
	USDA FOREST SERVICE LANDS
	WILDLIFE HABITAT SUIT/CONN

ARCHEOLOGICAL & HISTORIC

ARCH	ARCHEOLOGICAL BOUNDARY
HISTORIC DIST	HISTORIC DISTRICT BOUNDARY
HISTORIC	HISTORIC AREA
H	HISTORIC STRUCTURE

CONVENTIONAL TOPOGRAPHIC SYMBOLOGY

EXISTING FEATURES

	ROAD EDGE PAVEMENT
	ROAD EDGE GRAVEL
	DRIVEWAY EDGE
	DITCH
	FOUNDATION
	FENCE (EXISTING)
	FENCE WOOD POST
	FENCE STEEL POST
	GARDEN
	ROAD GUARDRAIL
	RAILROAD TRACKS
	CULVERT (EXISTING)
	STONE WALL
	WALL
	WOOD LINE
	BRUSH LINE
	HEDGE
	BODY OF WATER EDGE
	LEDGE EXPOSED

GREEN

PROJECT NAME: PLYMOUTH
PROJECT NUMBER: ER P23-1(328)

FILE NAME: z23b755legend.dgn
PROJECT LEADER: M. CRUZ
DESIGNED BY: E. NOONAN
LEGEND SHEET

PLOT DATE: 5/15/2025
DRAWN BY: C. WEBSTER
CHECKED BY: A. TSOUKALAS
SHEET 3 OF 12

Common Definitions:

Wetland Buffer: upland adjacent to wetland boundary. This should be depicted as a 50' zone immediately adjacent to wetland boundary. This should be only included on VT Wetlands permitting plans.

Ordinary High Water (OHW): 33 CFR 328.3(e) states…"The term ordinary high water mark means that line on the shore established by the fluctuations of water and indicated by physical characteristics such as a clear, natural line impressed on the bank, shelving, changes in the character of soil, destruction of terrestrial vegetation, the presence of litter and debris, or other appropriate means that consider the characteristics of the surrounding areas."

Secondary impacts: areas that have been drained, flooded, cleared, excavated or fragmented. Examples include: habitat fragmentation (disturbance to movement of aquatic wildlife, terrestrial wildlife), hydrology (draining stream with cofferdam), hydrological functions and non-point source impacts.

Temporary impacts: aquatic ecosystem loss as a result of fill placement that will be removed. Examples: stone pad to access piers, construction mats, placement of sandbag cofferdam.

Permanent impacts: aquatic ecosystem loss as a result of fill placement that will not be removed. Examples: stone placement for bank stabilization, pier construction, and scour protection around abutment.

VT IMPACT PERMITING PLAN SYMBOLOGY

OHW IMPACTS		
	OHW TEMPORARY	368 SF
	OHW PERMANENT	541 SF
	OHW SECONDARY	N/A
WETLAND IMPACTS		
	WETLANDS TEMPORARY	N/A
	WETLANDS PERMANENT	N/A
	WETLANDS SECONDARY	N/A
WETLAND BUFFER IMPACTS (VT ANR ONLY)		
	WETLANDS BUFFER TEMPORARY	N/A
	WETLANDS BUFFER PERMANENT	N/A
AREA/BOUNDARY LINESTYLE SYMBOLOGY		
	TOTAL IMPACT AREA	N/A
	WETLANDS BUFFER BOUNDARY	N/A
	DEWATERING AREA	N/A

IMPACT PERMITING PLAN SYMBOLOGY

IMPERVIOUS SURFACE IMPACTS		
	EXPANSION AREA	198 SF
	REDEVELOPMENT AREA	10,420 SF
	OTHER AREA	1,463 SF
	EXISTING IMPERVIOUS REMOVAL	111 SF
DISTURBANCE AREA IMPACTS		
	DISTURBANCE AREA	22,679 SF
FLOOD HAZARD & RIVER CORRIDOR IMPACTS		
	100-YEAR FLOODPLAIN	N/A
	FLOODPLAIN IMPACT AREA	N/A
	RIVER CORRIDOR IMPACT AREA	10,282 SF

GREEN

PROJECT NAME: PLYMOUTH	
PROJECT NUMBER: ER P23-1(317)	
FILE NAME: z23b755legend-env.dgn	PLOT DATE: 5/15/2025
PROJECT LEADER: M. CRUZ	DRAWN BY: V. PALMA
DESIGNED BY: V. PALMA	CHECKED BY: J. THORNE
ENVIRONMENTAL SYMBOLOGY & LEGEND	SHEET 4 OF 12

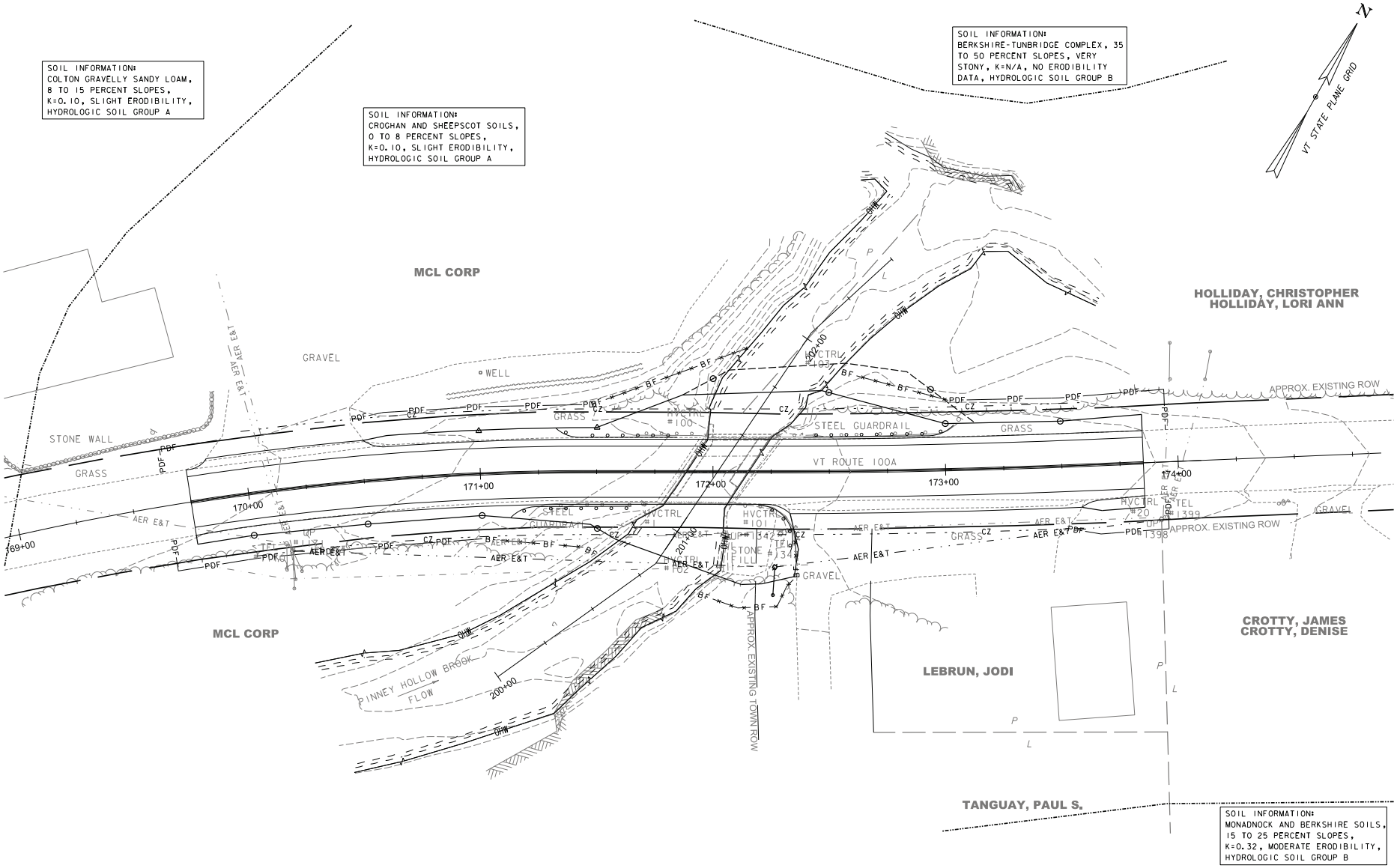

PROJECT NAME: PLYMOUTH	
PROJECT NUMBER: ER P23-1(328)	
FILE NAME: z23b755existingconditions.dgn	PLOT DATE: 5/15/2025
PROJECT LEADER: M. CRUZ	DRAWN BY: V. PALMA
DESIGNED BY: V. PALMA	CHECKED BY: J. THORNE
EXISTING CONDITIONS	SHEET 5 OF 12

LEGEND - EARTH DISTURBANCE PLAN

—∿—OHW— ORDINARY HIGH WATER

DISTURBANCE AREA

ABUTMENT 1	=12,038 SF
ABUTMENT 2	=10,641 SF
TOTAL	=22,679 SF (0.52 ACRES)

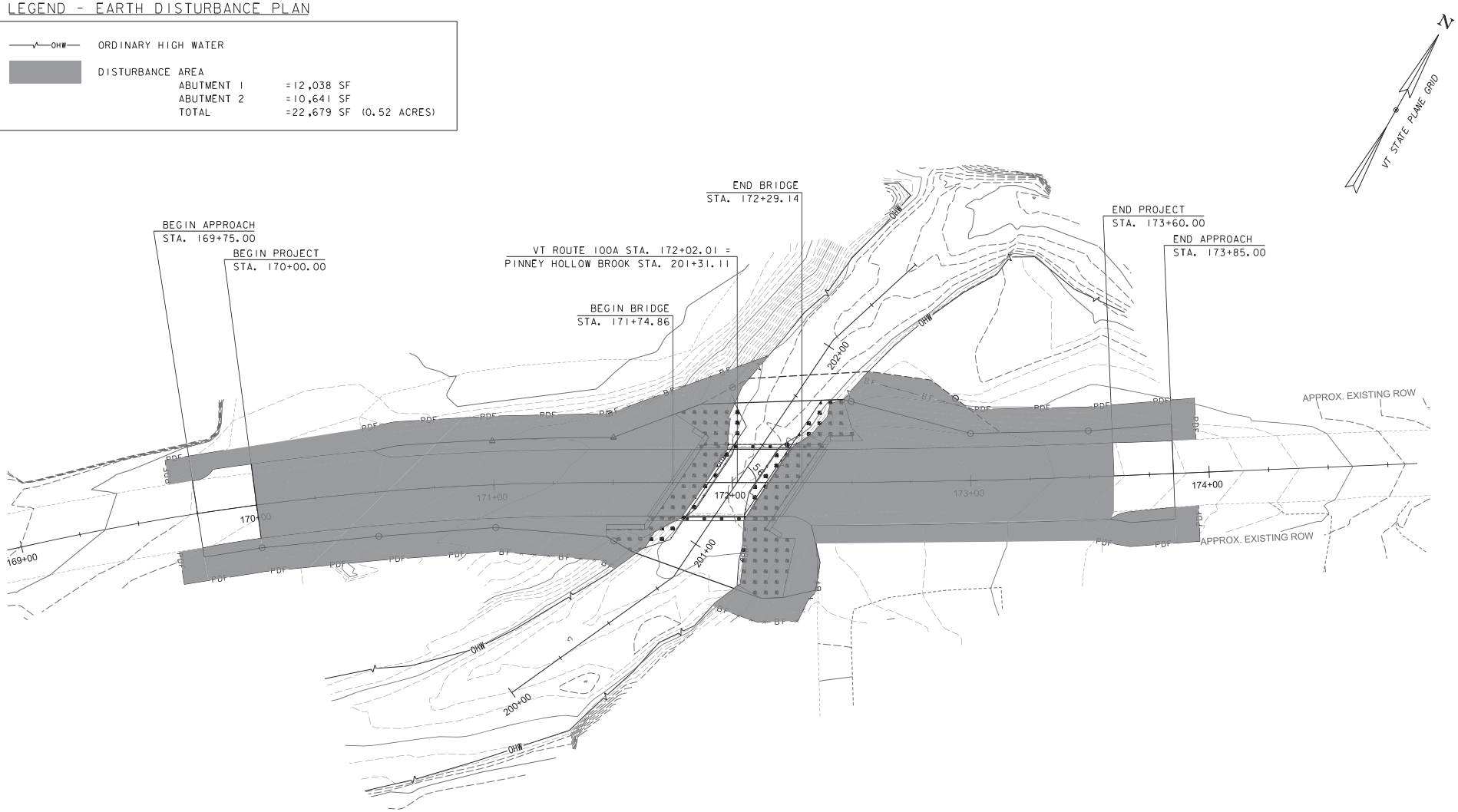

EXISTING BRIDGE INFORMATION
SINGLE SPAN CONCRETE SLAB
BUILT 1975
28' APPROX. SPAN

0 20 40
SCALE IN FEET

GREEN

PROJECT NAME: PLYMOUTH	
PROJECT NUMBER: ER P23-1(317)	
FILE NAME: z23b755earthdist-bdr.dgn	PLOT DATE: 5/15/2025
PROJECT LEADER: M. CRUZ	DRAWN BY: V. PALMA
DESIGNED BY: V.PALMA	CHECKED BY: J. THORNE
EARTH DISTURBANCE PLAN	SHEET 6 OF 12

LEGEND - IMPERVIOUS SURFACES

EXPANSION AREA		
	BEGIN PROJECT	=185 SF
	END PROJECT	=13 SF
	TOTAL	=198 SF
REDEVELOPMENT AREA		
	AREA	=10,420 SF
	TOTAL	=10,420 SF
OTHER AREA		
	ABUTMENT 1	=753 SF
	ABUTMENT 2	=710 SF
	TOTAL	=1,463 SF
EXISTING IMPERVIOUS REMOVAL		
	ABUTMENT 1	=103 SF
	ABUTMENT 2	=8 SF
	TOTAL	=111 SF

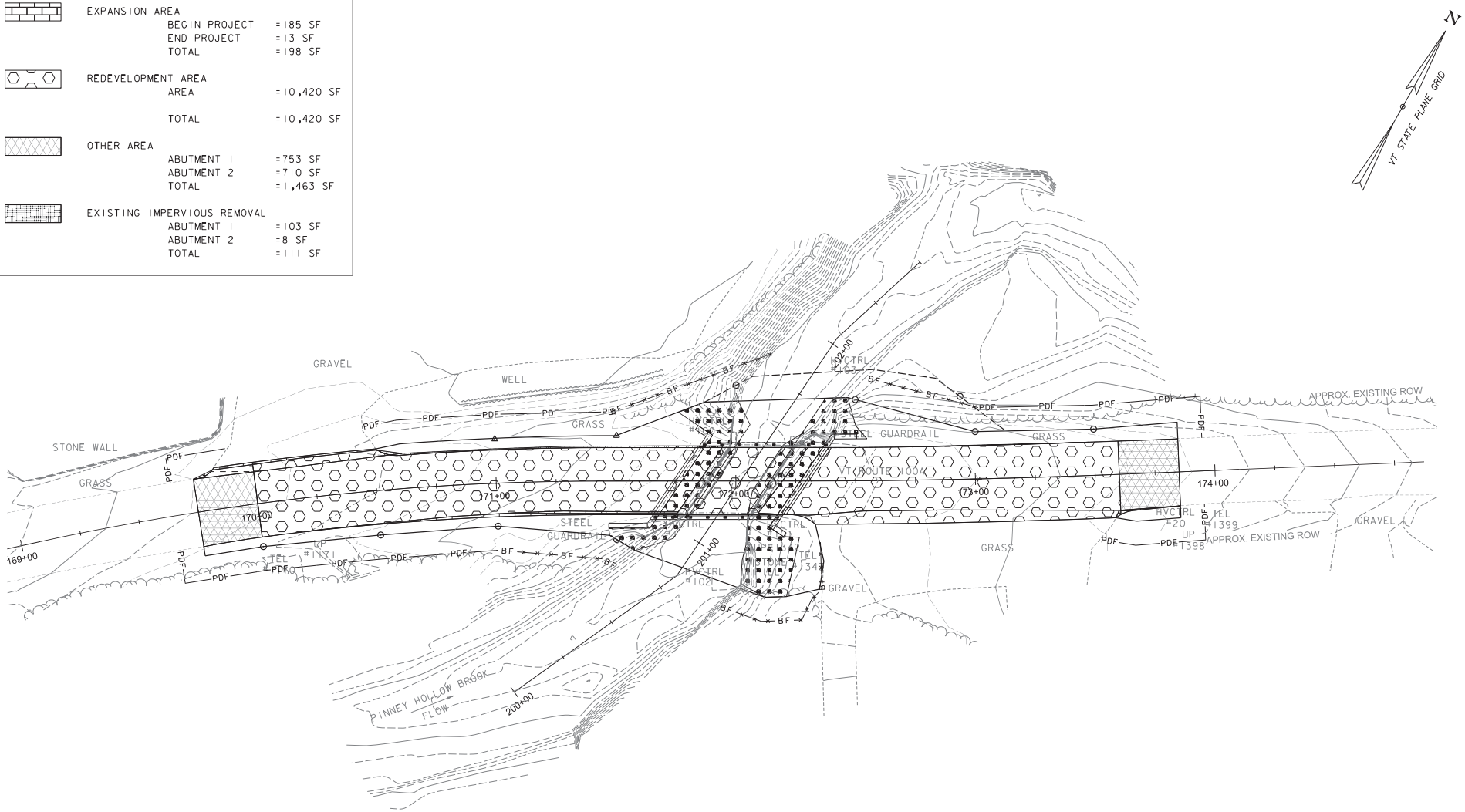

EXISTING BRIDGE INFORMATION
SINGLE SPAN CONCRETE SLAB
BUILT 1975
28' APPROX. SPAN

0 20 40
SCALE IN FEET

GREEN

PROJECT NAME: PLYMOUTH	
PROJECT NUMBER: ER P23-1(328)	
FILE NAME: z23b7551mp-sur.dgn	PLOT DATE: 5/15/2025
PROJECT LEADER: M. CRUZ	DRAWN BY: V. PALMA
DESIGNED BY: V. PALMA	CHECKED BY: J. THORNE
IMPERVIOUS SURFACES	SHEET 7 OF 12

LEGEND - FLOOD HAZARD & RIVER CORRIDOR PLAN

----------	100-YEAR FLOODPLAIN (NO 100-YEAR FLOODPLAIN FOR PINNEY HOLLOW BROOK)	
	FLOODPLAIN IMPACT AREA	=0 SF
	RIVER CORRIDOR IMPACT AREA	=10,282 SF

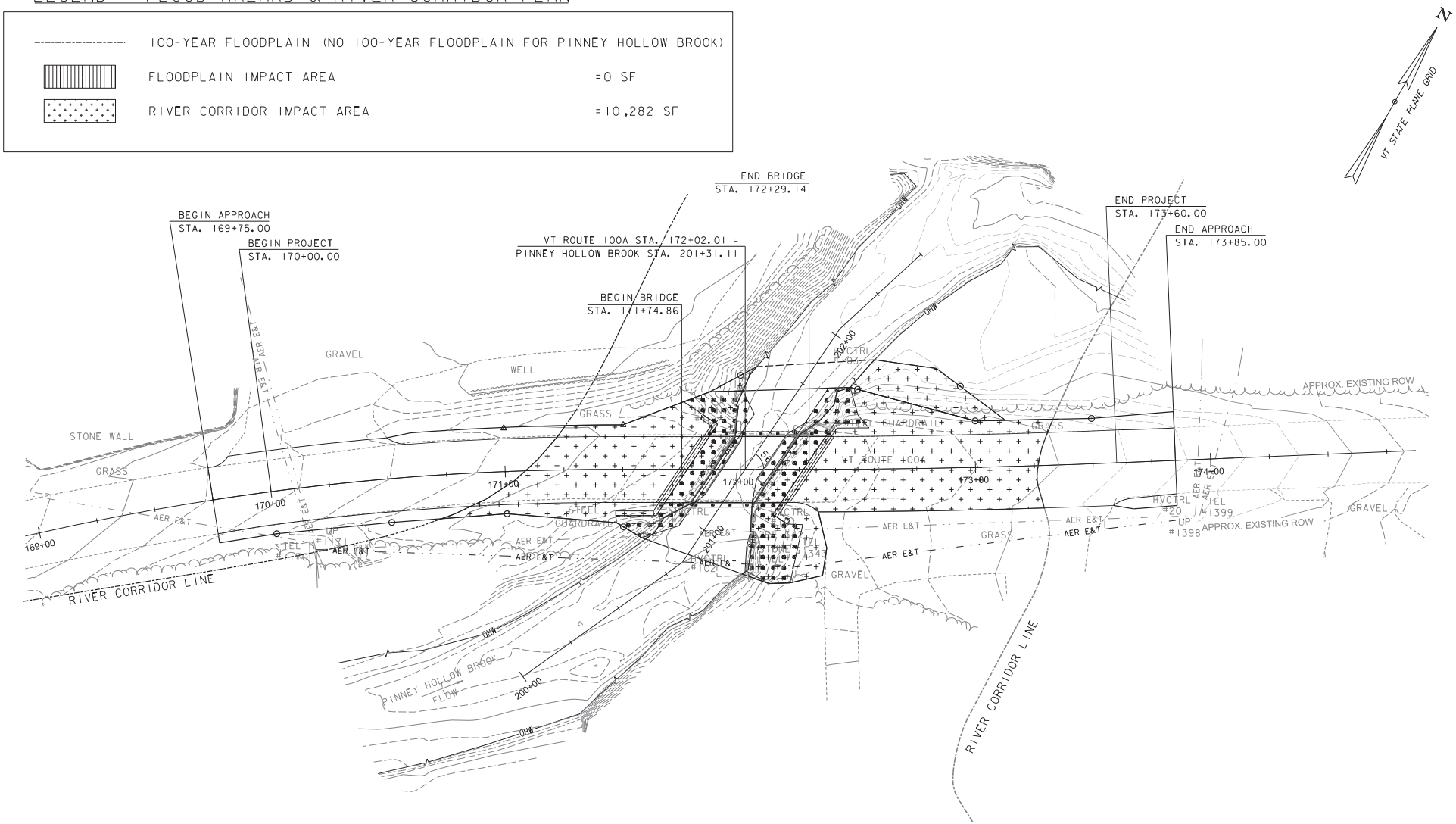

EXISTING BRIDGE INFORMATION
SINGLE SPAN CONCRETE SLAB
BUILT 1975
28' APPROX. SPAN

0 20 40
SCALE IN FEET

GREEN

PROJECT NAME: PLYMOUTH	
PROJECT NUMBER: ER P23-1(328)	
FILE NAME: z23b755fldhzd.dgn	PLOT DATE: 5/15/2025
PROJECT LEADER: M. CRUZ	DRAWN BY: V. PALMA
DESIGNED BY: V. PALMA	CHECKED BY: J. THORNE
FLOOD HAZARD & RIVER CORRIDOR PLAN	SHEET 8 OF 12

LEGEND - ACOE PLAN

- 100-YEAR FLOODPLAIN - (NO 100-YEAR FLOODPLAIN FOR PINNEY HOLLOW BROOK)
- OHW — ORDINARY HIGH WATER
- TEMPORARY ORDINARY HIGH WATER IMPACT
  - TOTAL AREA = 368 SF
  - FILL VOLUME = 376 CF
- PERMANENT ORDINARY HIGH WATER IMPACT
  - TOTAL AREA = 541 SF
  - FILL VOLUME = 1,074 CF

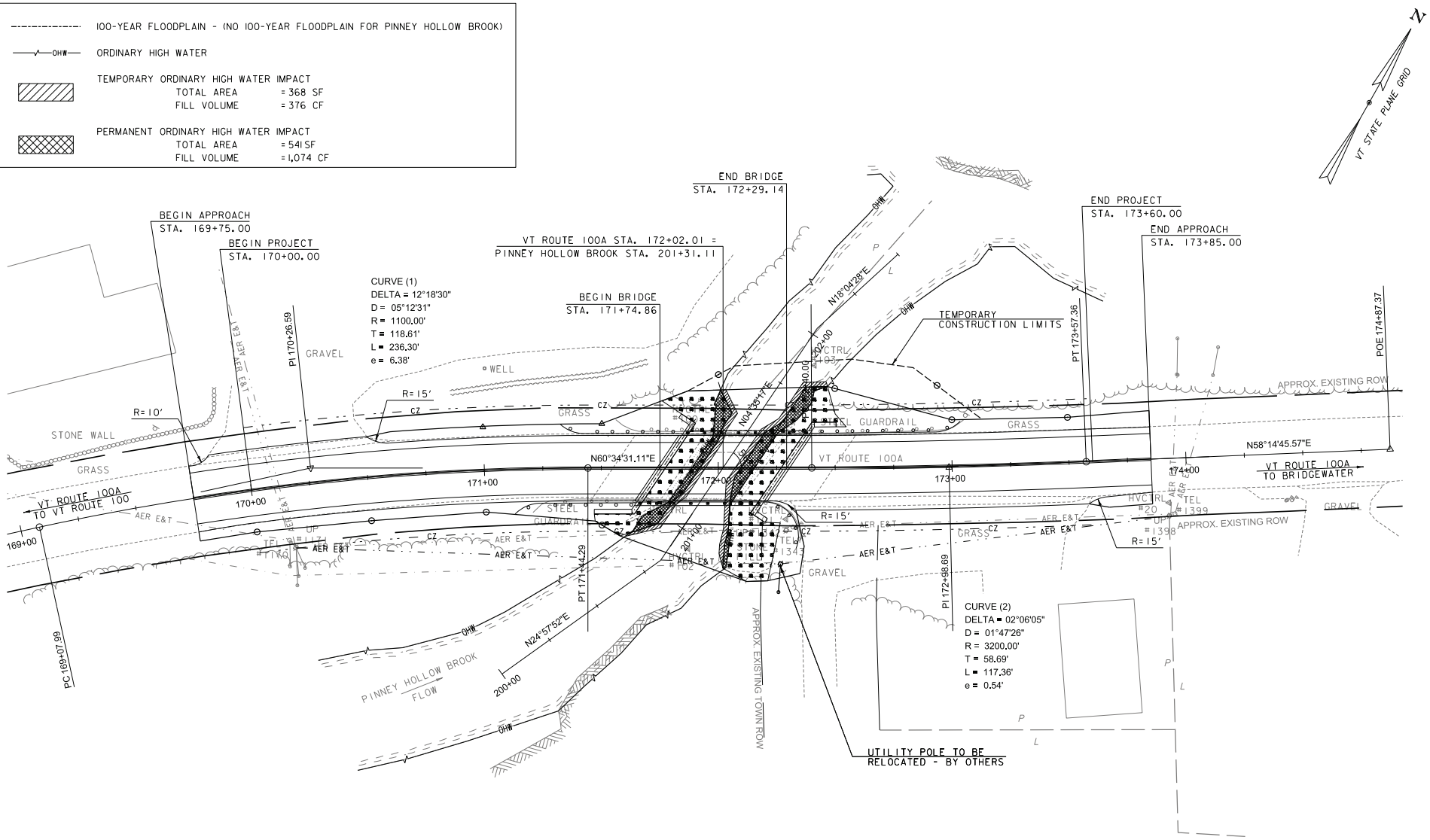

GREEN

PROJECT NAME: PLYMOUTH	
PROJECT NUMBER: ER P23-1(328)	
FILE NAME: z23b755ACOE.dgn	PLOT DATE: 5/15/2025
PROJECT LEADER: M. CRUZ	DRAWN BY: M. WOLENSKI
DESIGNED BY: V. PALMA	CHECKED BY: J. THORNE
ACOE PLAN	SHEET 9 OF 12

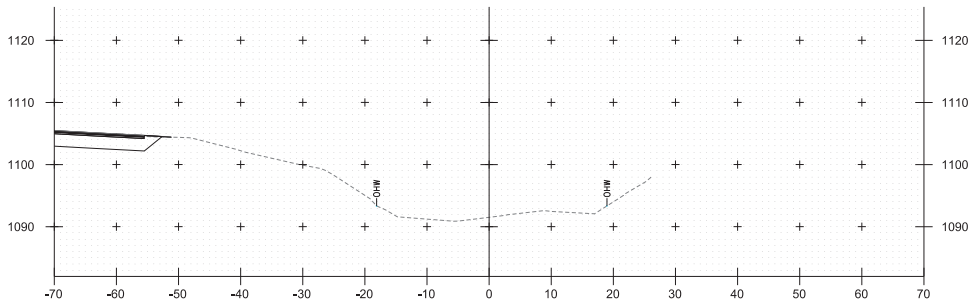

200+50

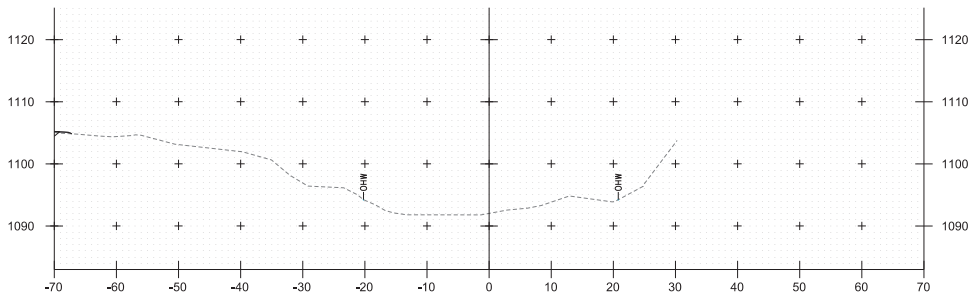

200+25

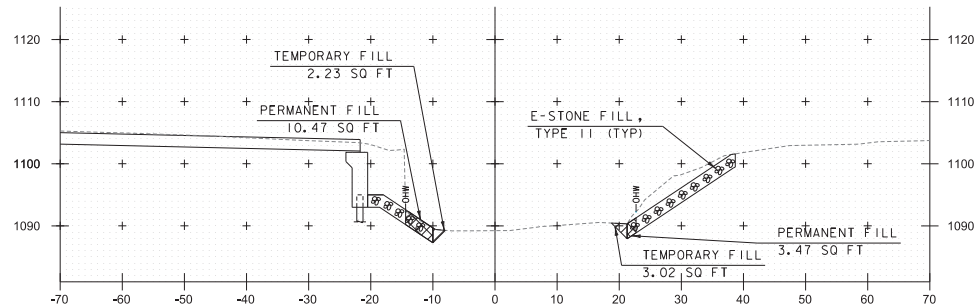

201+00

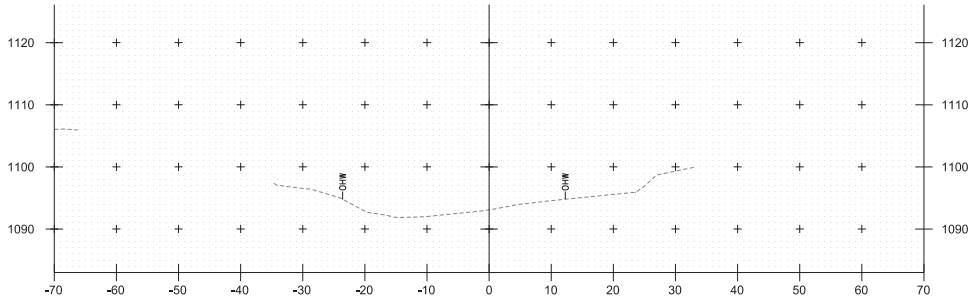

200+00

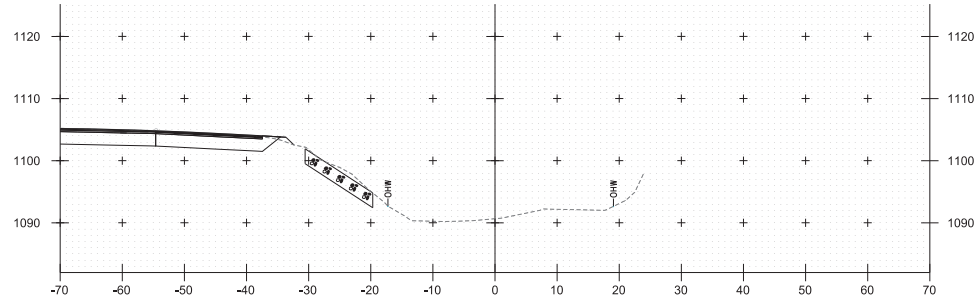

200+75

GREEN

PROJECT NAME: PLYMOUTH	
PROJECT NUMBER: ER P23-1(328)	
FILE NAME: z23b755xs_copy 2025.05.14.dgn	PLOT DATE: 5/15/2025
PROJECT LEADER: M. CRUZ	DRAWN BY: M. WOLENSKI
DESIGNED BY: V. PALMA	CHECKED BY: J. THORNE
ACOE CHANNEL CROSS SECTIONS SHEET 1	SHEET 10 OF 12

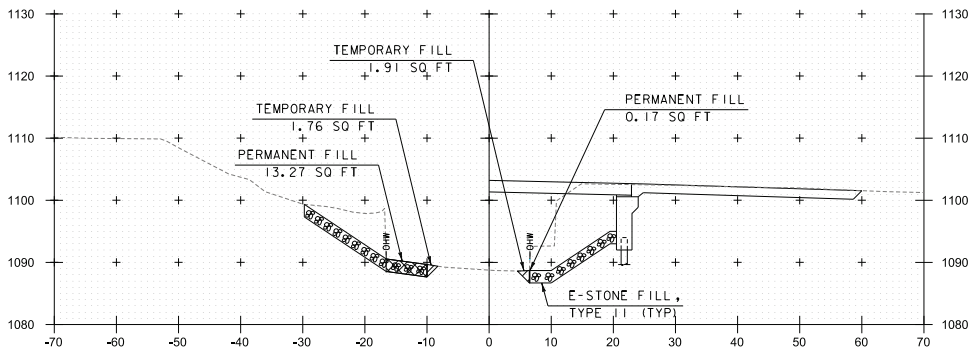

201+50

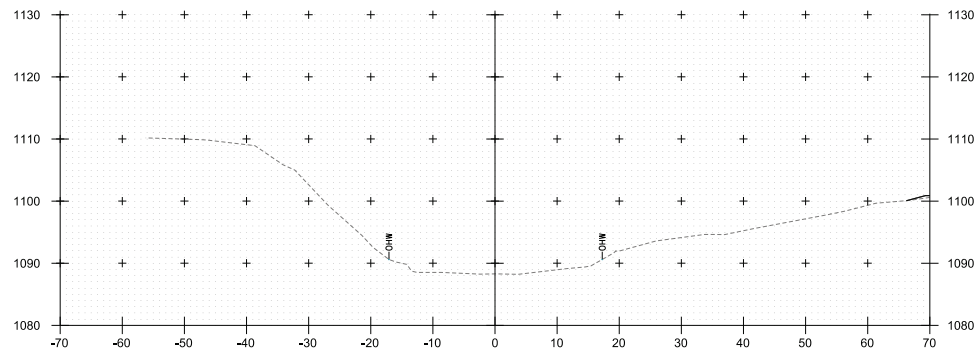

202+00

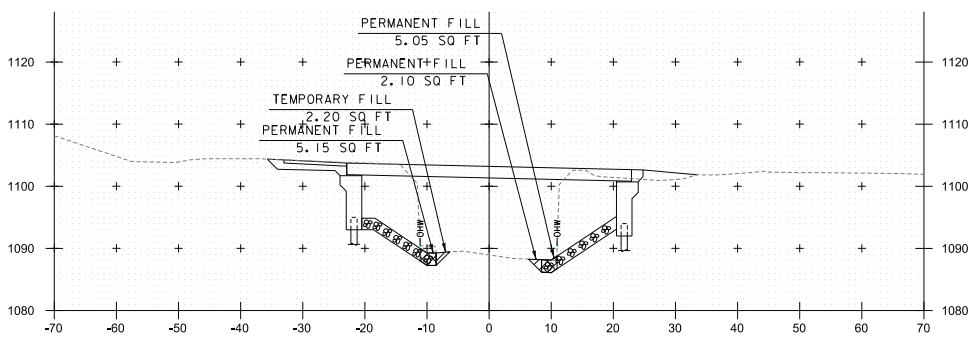

201+25

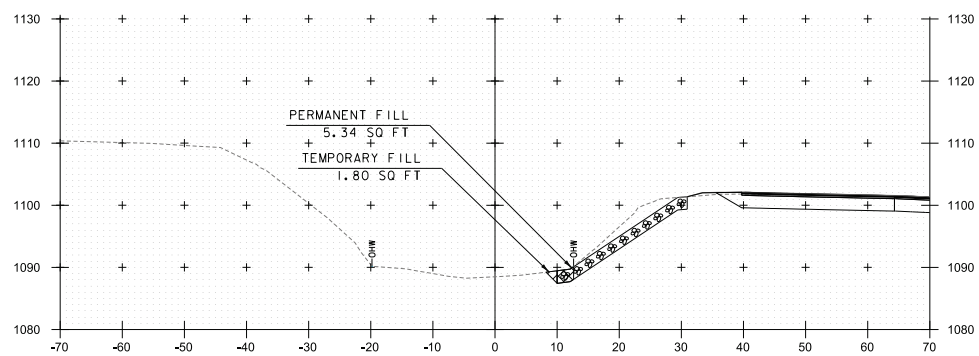

201+75

PROJECT NAME: PLYMOUTH	
PROJECT NUMBER: ER P23-1(328)	
FILE NAME: z23b755xs_copy 2025.05.14.dgn	PLOT DATE: 5/15/2025
PROJECT LEADER: M. CRUZ	DRAWN BY: M. WOLENSKI
DESIGNED BY: V. PALMA	CHECKED BY: J. THORNE
ACOE CHANNEL CROSS SECTIONS SHEET 2	SHEET 11 OF 12

GREEN

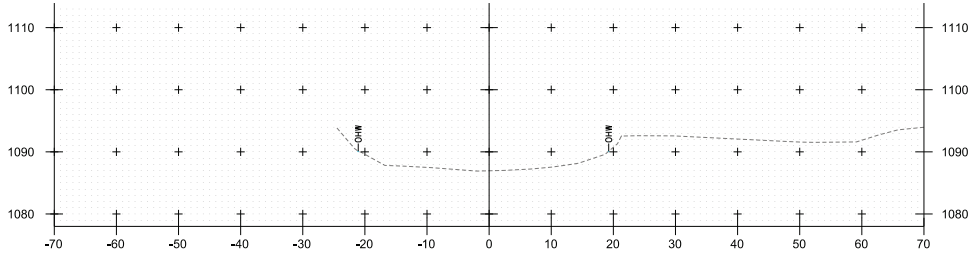

202+50

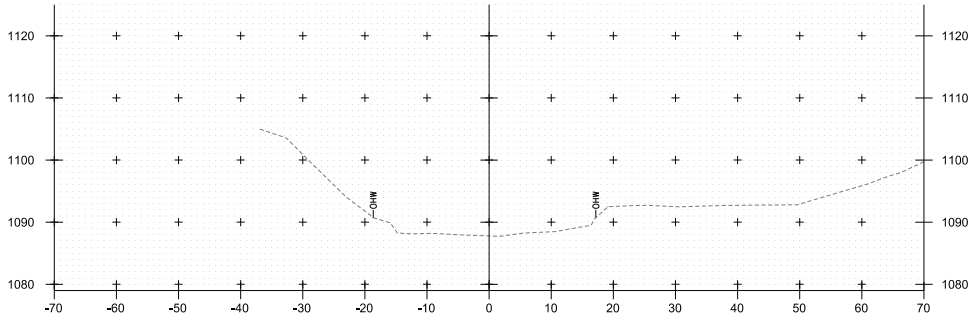

202+25

GREEN

PROJECT NAME: PLYMOUTH	
PROJECT NUMBER: ER P23-1(328)	
FILE NAME: z23b755xs_copy 2025.05.14.dgn	PLOT DATE: 5/15/2025
PROJECT LEADER: M. CRUZ	DRAWN BY: M. WOLENSKI
DESIGNED BY: V. PALMA	CHECKED BY: J. THORNE
ACOE CHANNEL CROSS SECTIONS SHEET 3	SHEET 12 OF 12

CONTRACT PROVISIONS FOR FEDERAL-AID CONSTRUCTION CONTRACTS

I. General
II. Nondiscrimination
III. Davis-Bacon and Related Act Provisions
IV. Contract Work Hours and Safety Standards Act Provisions
V. Subletting or Assigning the Contract
VI. Safety: Accident Prevention
VII. False Statements Concerning Highway Projects
VIII. Implementation of Clean Air Act and Federal Water Pollution Control Act
IX. Certification Regarding Debarment, Suspension, Ineligibility and Voluntary Exclusion
X. Certification Regarding Use of Contract Funds for Lobbying
XI. Use of United States-Flag Vessels

ATTACHMENTS

A. Employment and Materials Preference for Appalachian Development Highway System or Appalachian Local Access Road Contracts (included in Appalachian contracts only).

I. GENERAL

1. Historically, contracting agencies using Federal-aid highway funds were required to ensure Form FHWA-1273 was physically incorporated into all contracts and subcontracts. Effective June 10, 2026, this requirement was eliminated [91 FR 25492]. Future use of Form FHWA-1273 is now optional on the part of the contracting agency using Federal-aid highway funds. FHWA continues to make Form FHWA-1273 available as a convenience to contracting agencies. Contracting agencies must continue to ensure compliance with the provisions cited in Form FHWA-1273 in accordance with the provisions regardless of the use of Form FHWA-1273. Accordingly, the contracting agency retains the authority to determine whether the contractor must use Form FHWA-1273 to physically incorporate required contract provisions in each subcontract and in lower tier contracts. Where permitted by the contracting agency, the contractor may choose other ways to include required contract provisions in each subcontract, besides incorporating Form FHWA-1273. Contract provisions in Form FHWA-1273 are not required to be physically included in subcontracts for design services on Federal-aid design-build contracts, or in purchase orders, rental agreements and other agreements for supplies or services.

The applicable provisions of Form FHWA-1273 are incorporated by reference for work done under any purchase order, rental agreement or agreement for other services. The prime contractor or design-builder shall be responsible for compliance by any subcontractor, lower-tier subcontractor or service provider.

Contracting agencies may reference Form FHWA-1273 in solicitation-for-bids or request-for-proposals documents.

2. Subject to the applicability criteria noted in the following sections, these contract provisions shall apply to all work performed on the contract by the contractor's own organization and with the assistance of workers under the contractor's immediate superintendence and to all work performed on the contract by piecework, station work, or by subcontract.

3. A breach of any of the stipulations contained in these Required Contract Provisions may be sufficient grounds for withholding of progress payments, withholding of final payment, termination of the contract, suspension / debarment or any other action determined to be appropriate by the contracting agency and FHWA.

4. Selection of Labor: During the performance of this contract, the contractor shall not use convict labor for any purpose within the limits of a construction project on a Federal-aid highway unless it is labor performed by convicts who are on parole, supervised release, or probation. 23 U.S.C. 114(b). The term Federal-aid highway does not include roadways functionally classified as local roads or rural minor collectors. 23 U.S.C. 101(a).

II. NONDISCRIMINATION

The contractor and all subcontractors must comply with the following policies: 29 CFR Parts 1625-1627, 23 U.S.C. 140, Section 504 of the Rehabilitation Act of 1973, as amended (29 U.S.C. 794), Title VI of the Civil Rights Act of 1964, as amended (42 U.S.C. 2000d et seq.), and related regulations including 49 CFR Parts 21, 26, and 27, including any amendments thereto.

Note: The U.S. Department of Labor has exclusive authority to determine compliance with 29 CFR Parts 1625-1627. The contracting agency and the FHWA have the authority and the responsibility to ensure compliance with 23 U.S.C. 140, Section 504 of the Rehabilitation Act of 1973, as amended (29 U.S.C. 794), and Title VI of the Civil Rights Act of 1964, as amended (42 U.S.C. 2000d et seq.), and related regulations including 49 CFR Parts 21, 26, and 27, including any amendments thereto.

The provisions of the Americans with Disabilities Act of 1990 (42 U.S.C. 12101 et seq.) set forth under 28 CFR Part 35 and 29 CFR Part 1630 are incorporated by reference in this contract.

1. Assurances Required:

a. The requirements of 49 CFR Part 26, including any amendments thereto, and the State DOT's FHWA-approved Disadvantaged Business Enterprise (DBE) program are incorporated by reference.

b. The contractor, subrecipient or subcontractor shall not discriminate on the basis of race, color, national origin, or sex in the performance of this contract. The contractor shall carry out applicable requirements of 49 CFR part 26, including any amendments thereto, in the award and administration of DOT-assisted contracts. Failure by the contractor to carry out these requirements is a material breach of this contract, which may result in the termination of this contract or such other remedy as the recipient deems appropriate, which may include, but is not limited to:

(1) Withholding monthly progress payments;
(2) Assessing sanctions;
(3) Liquidated damages; and/or
(4) Disqualifying the contractor from future bidding as non-responsible.

c. The Title VI and nondiscrimination provisions of U.S. DOT Order 1050.2A at Appendixes A and E, including any amendments thereto, are incorporated by reference. 49 CFR Part 21.

III. DAVIS-BACON AND RELATED ACT PROVISIONS

This section is applicable to all Federal-aid construction projects exceeding $2,000 and to all related subcontracts and lower-tier subcontracts (regardless of subcontract size), in accordance with 29 CFR 5.5. The requirements apply to all projects located within the right-of-way of a roadway that is functionally classified as Federal-aid highway. 23 U.S.C. 113. This excludes roadways functionally classified as local roads or rural minor collectors, which are exempt. 23 U.S.C. 101. Where applicable law requires that projects be treated as a project on a Federal-aid highway, the provisions of this subpart will apply regardless of the location of the project. Examples include: Surface Transportation Block Grant Program projects funded under 23 U.S.C. 133 [excluding recreational trails projects], the Nationally Significant Freight and Highway Projects funded under 23 U.S.C. 117, and National Highway Freight Program projects funded under 23 U.S.C. 167.

The following provisions are from the U.S. Department of Labor regulations in 29 CFR 5.5 “Contract provisions and related matters” with minor revisions to conform to the FHWA-1273 format and FHWA program requirements.

1. Minimum wages (29 CFR 5.5)

a. *Wage rates and fringe benefits.* All laborers and mechanics employed or working upon the site of the work (or otherwise working in construction or development of the project under a development statute), will be paid unconditionally and not less often than once a week, and without subsequent deduction or rebate on any account (except such payroll deductions as are permitted by regulations issued by the Secretary of Labor under the Copeland Act (29 CFR part 3)), the full amount of basic hourly wages and bona fide fringe benefits (or cash equivalents thereof) due at time of payment computed at rates not less than those contained in the wage determination of the Secretary of Labor which is attached hereto and made a part hereof, regardless of any contractual relationship which may be alleged to exist between the contractor and such laborers and mechanics. As provided in paragraphs (d) and (e) of 29 CFR 5.5, the appropriate wage determinations are effective by operation of law even if they have not been attached to the contract. Contributions made or costs reasonably anticipated for bona fide fringe benefits under the Davis-Bacon Act (40 U.S.C. 3141(2)(B)) on behalf of laborers or mechanics are considered wages paid to such laborers or mechanics, subject to the provisions of paragraph 1.e. of this section; also, regular contributions made or costs incurred for more than a weekly period (but not less often than quarterly) under plans, funds, or programs which cover the particular weekly period, are deemed to be constructively made or incurred during such weekly period. Such laborers and mechanics must be paid the appropriate wage rate and fringe benefits on the wage determination for the classification(s) of work actually performed, without regard to skill, except as provided in paragraph 4. of this section. Laborers or mechanics performing work in more than one classification may be compensated at the rate specified for each classification for the time actually worked therein: *Provided,* That the employer's payroll records accurately set forth the time spent in each classification in which work is performed. The wage determination (including any additional classifications and wage rates conformed under paragraph 1.c. of this section) and the Davis-Bacon poster (WH–1321) must be posted at all times by the contractor and its subcontractors at the site of the work in a prominent and accessible place where it can be easily seen by the workers.

b. *Frequently recurring classifications.* (1) In addition to wage and fringe benefit rates that have been determined to be prevailing under the procedures set forth in 29 CFR part 1, a wage determination may contain, pursuant to § 1.3(f), wage and fringe benefit rates for classifications of laborers and mechanics for which conformance requests are regularly submitted pursuant to paragraph 1.c. of this section, provided that:

(i) The work performed by the classification is not performed by a classification in the wage determination for which a prevailing wage rate has been determined;

(ii) The classification is used in the area by the construction industry; and

(iii) The wage rate for the classification bears a reasonable relationship to the prevailing wage rates contained in the wage determination.

(2) The Administrator will establish wage rates for such classifications in accordance with paragraph 1.c.(1)(iii) of this section. Work performed in such a classification must be paid at no less than the wage and fringe benefit rate listed on the wage determination for such classification.

c. *Conformance.* (1) The contracting officer must require that any class of laborers or mechanics, including helpers, which is not listed in the wage determination and which is to be employed under the contract be classified in conformance with the wage determination. Conformance of an additional classification and wage rate and fringe benefits is appropriate only when the following criteria have been met:

(i) The work to be performed by the classification requested is not performed by a classification in the wage determination; and

(ii) The classification is used in the area by the construction industry; and

(iii) The proposed wage rate, including any bona fide fringe benefits, bears a reasonable relationship to the wage rates contained in the wage determination.

(2) The conformance process may not be used to split, subdivide, or otherwise avoid application of classifications listed in the wage determination.

(3) If the contractor and the laborers and mechanics to be employed in the classification (if known), or their representatives, and the contracting officer agree on the

classification and wage rate (including the amount designated for fringe benefits where appropriate), a report of the action taken will be sent by the contracting officer by email to *DBAconformance@dol.gov*. The Administrator, or an authorized representative, will approve, modify, or disapprove every additional classification action within 30 days of receipt and so advise the contracting officer or will notify the contracting officer within the 30–day period that additional time is necessary.

(4) In the event the contractor, the laborers or mechanics to be employed in the classification or their representatives, and the contracting officer do not agree on the proposed classification and wage rate (including the amount designated for fringe benefits, where appropriate), the contracting officer will, by email to *DBAconformance@dol.gov,* refer the questions, including the views of all interested parties and the recommendation of the contracting officer, to the Administrator for determination. The Administrator, or an authorized representative, will issue a determination within 30 days of receipt and so advise the contracting officer or will notify the contracting officer within the 30–day period that additional time is necessary.

(5) The contracting officer must promptly notify the contractor of the action taken by the Wage and Hour Division under paragraphs 1.c.(3) and (4) of this section. The contractor must furnish a written copy of such determination to each affected worker or it must be posted as a part of the wage determination. The wage rate (including fringe benefits where appropriate) determined pursuant to paragraph 1.c.(3) or (4) of this section must be paid to all workers performing work in the classification under this contract from the first day on which work is performed in the classification.

d. *Fringe benefits not expressed as an hourly rate.* Whenever the minimum wage rate prescribed in the contract for a class of laborers or mechanics includes a fringe benefit which is not expressed as an hourly rate, the contractor may either pay the benefit as stated in the wage determination or may pay another bona fide fringe benefit or an hourly cash equivalent thereof.

e. *Unfunded plans.* If the contractor does not make payments to a trustee or other third person, the contractor may consider as part of the wages of any laborer or mechanic the amount of any costs reasonably anticipated in providing bona fide fringe benefits under a plan or program, *Provided,* That the Secretary of Labor has found, upon the written request of the contractor, in accordance with the criteria set forth in § 5.28, that the applicable standards of the Davis-Bacon Act have been met. The Secretary of Labor may require the contractor to set aside in a separate account assets for the meeting of obligations under the plan or program.

f. *Interest.* In the event of a failure to pay all or part of the wages required by the contract, the contractor will be required to pay interest on any underpayment of wages.

2. Withholding (29 CFR 5.5)

a. *Withholding requirements.* The contracting agency may, upon its own action, or must, upon written request of an authorized representative of the Department of Labor, withhold or cause to be withheld from the contractor so much of the accrued payments or advances as may be considered necessary to satisfy the liabilities of the prime contractor or any subcontractor for the full amount of wages and monetary relief, including interest, required by the clauses set forth in this section for violations of this contract, or to satisfy any such liabilities required by any other Federal contract, or federally assisted contract subject to Davis-Bacon labor standards, that is held by the same prime contractor (as defined in § 5.2). The necessary funds may be withheld from the contractor under this contract, any other Federal contract with the same prime contractor, or any other federally assisted contract that is subject to Davis-Bacon labor standards requirements and is held by the same prime contractor, regardless of whether the other contract was awarded or assisted by the same agency, and such funds may be used to satisfy the contractor liability for which the funds were withheld. In the event of a contractor's failure to pay any laborer or mechanic, including any apprentice or helper working on the site of the work all or part of the wages required by the contract, or upon the contractor's failure to submit the required records as discussed in paragraph 3.d. of this section, the contracting agency may on its own initiative and after written notice to the contractor, take such action as may be necessary to cause the suspension of any further payment, advance, or guarantee of funds until such violations have ceased.

b. *Priority to withheld funds.* The Department has priority to funds withheld or to be withheld in accordance with paragraph 2.a. of this section or Section IV, paragraph 3.a., or both, over claims to those funds by:

(1) A contractor's surety(ies), including without limitation performance bond sureties and payment bond sureties;

(2) A contracting agency for its reprocurement costs;

(3) A trustee(s) (either a court-appointed trustee or a U.S. trustee, or both) in bankruptcy of a contractor, or a contractor's bankruptcy estate;

(4) A contractor's assignee(s);

(5) A contractor's successor(s); or

(6) A claim asserted under the Prompt Payment Act, 31 U.S.C. 3901–3907.

3. Records and certified payrolls (29 CFR 5.5)

a. *Basic record requirements* (1) *Length of record retention.* All regular payrolls and other basic records must be maintained by the contractor and any subcontractor during the course of the work and preserved for all laborers and mechanics working at the site of the work (or otherwise working in construction or development of the project under a development statute) for a period of at least 3 years after all the work on the prime contract is completed.

(2) *Information required.* Such records must contain the name; Social Security number; last known address, telephone number, and email address of each such worker; each worker's correct classification(s) of work actually performed; hourly rates of wages paid (including rates of contributions or costs anticipated for bona fide fringe benefits or cash equivalents thereof of the types described in 40 U.S.C. 3141(2)(B) of the Davis-Bacon Act); daily and weekly number

of hours actually worked in total and on each covered contract; deductions made; and actual wages paid.

(3) *Additional records relating to fringe benefits.* Whenever the Secretary of Labor has found under paragraph 1.e. of this section that the wages of any laborer or mechanic include the amount of any costs reasonably anticipated in providing benefits under a plan or program described in 40 U.S.C. 3141(2)(B) of the Davis-Bacon Act, the contractor must maintain records which show that the commitment to provide such benefits is enforceable, that the plan or program is financially responsible, and that the plan or program has been communicated in writing to the laborers or mechanics affected, and records which show the costs anticipated or the actual cost incurred in providing such benefits.

(4) *Additional records relating to apprenticeship.* Contractors with apprentices working under approved programs must maintain written evidence of the registration of apprenticeship programs, the registration of the apprentices, and the ratios and wage rates prescribed in the applicable programs.

b. *Certified payroll requirements* (1) *Frequency and method of submission.* The contractor or subcontractor must submit weekly, for each week in which any DBA- or Related Acts-covered work is performed, certified payrolls to the contracting agency. The prime contractor is responsible for the submission of all certified payrolls by all subcontractors. A contracting agency or prime contractor may permit or require contractors to submit certified payrolls through an electronic system, as long as the electronic system requires a legally valid electronic signature; the system allows the contractor, the contracting agency, and the Department of Labor to access the certified payrolls upon request for at least 3 years after the work on the prime contract has been completed; and the contracting agency or prime contractor permits other methods of submission in situations where the contractor is unable or limited in its ability to use or access the electronic system.

(2) *Information required.* The certified payrolls submitted must set out accurately and completely all of the information required to be maintained under paragraph 3.a.(2) of this section, except that full Social Security numbers and last known addresses, telephone numbers, and email addresses must not be included on weekly transmittals. Instead, the certified payrolls need only include an individually identifying number for each worker (*e.g.,* the last four digits of the worker's Social Security number). The required weekly certified payroll information may be submitted using Optional Form WH–347 or in any other format desired. Optional Form WH–347 is available for this purpose from the Wage and Hour Division website at *https://www.dol.gov/sites/dolgov/files/WHD/legacy/files/wh347/.pdf* or its successor website. It is not a violation of this section for a prime contractor to require a subcontractor to provide full Social Security numbers and last known addresses, telephone numbers, and email addresses to the prime contractor for its own records, without weekly submission by the subcontractor to the contracting agency.

(3) *Statement of Compliance.* Each certified payroll submitted must be accompanied by a "Statement of Compliance," signed by the contractor or subcontractor, or the contractor's or subcontractor's agent who pays or supervises the payment of the persons working on the contract, and must certify the following:

(i) That the certified payroll for the payroll period contains the information required to be provided under paragraph 3.b. of this section, the appropriate information and basic records are being maintained under paragraph 3.a. of this section, and such information and records are correct and complete;

(ii) That each laborer or mechanic (including each helper and apprentice) working on the contract during the payroll period has been paid the full weekly wages earned, without rebate, either directly or indirectly, and that no deductions have been made either directly or indirectly from the full wages earned, other than permissible deductions as set forth in 29 CFR part 3; and

(iii) That each laborer or mechanic has been paid not less than the applicable wage rates and fringe benefits or cash equivalents for the classification(s) of work actually performed, as specified in the applicable wage determination incorporated into the contract.

(4) *Use of Optional Form WH–347.* The weekly submission of a properly executed certification set forth on the reverse side of Optional Form WH–347 will satisfy the requirement for submission of the "Statement of Compliance" required by paragraph 3.b.(3) of this section.

(5) *Signature.* The signature by the contractor, subcontractor, or the contractor's or subcontractor's agent must be an original handwritten signature or a legally valid electronic signature.

(6) *Falsification.* The falsification of any of the above certifications may subject the contractor or subcontractor to civil or criminal prosecution under 18 U.S.C. 1001 and 31 U.S.C. 3729.

(7) *Length of certified payroll retention.* The contractor or subcontractor must preserve all certified payrolls during the course of the work and for a period of 3 years after all the work on the prime contract is completed.

c. *Contracts, subcontracts, and related documents.* The contractor or subcontractor must maintain this contract or subcontract and related documents including, without limitation, bids, proposals, amendments, modifications, and extensions. The contractor or subcontractor must preserve these contracts, subcontracts, and related documents during the course of the work and for a period of 3 years after all the work on the prime contract is completed.

d. *Required disclosures and access* (1) *Required record disclosures and access to workers.* The contractor or subcontractor must make the records required under paragraphs 3.a. through 3.c. of this section, and any other documents that the contracting agency, the State DOT, the FHWA, or the Department of Labor deems necessary to determine compliance with the labor standards provisions of any of the applicable statutes referenced by § 5.1, available for inspection, copying, or transcription by authorized representatives of the contracting agency, the State DOT, the FHWA, or the Department of Labor, and must permit such representatives to interview workers during working hours on the job.

(2) *Sanctions for non-compliance with records and worker access requirements.* If the contractor or subcontractor fails to submit the required records or to make them available, or refuses to permit worker interviews during working hours on the job, the Federal agency may, after written notice to the contractor, sponsor, applicant, owner, or other entity, as the case may be, that maintains such records or that employs such workers, take such action as may be necessary to cause the suspension of any further payment, advance, or guarantee of funds. Furthermore, failure to submit the required records upon request or to make such records available, or to permit worker interviews during working hours on the job, may be grounds for debarment action pursuant to § 5.12. In addition, any contractor or other person that fails to submit the required records or make those records available to WHD within the time WHD requests that the records be produced will be precluded from introducing as evidence in an administrative proceeding under 29 CFR part 6 any of the required records that were not provided or made available to WHD. WHD will take into consideration a reasonable request from the contractor or person for an extension of the time for submission of records. WHD will determine the reasonableness of the request and may consider, among other things, the location of the records and the volume of production.

(3) *Required information disclosures.* Contractors and subcontractors must maintain the full Social Security number and last known address, telephone number, and email address of each covered worker, and must provide them upon request to the contracting agency, the State DOT, the FHWA, the contractor, or the Wage and Hour Division of the Department of Labor for purposes of an investigation or other compliance action.

4. Apprentices and equal employment opportunity (29 CFR 5.5)

a. *Apprentices* (1) *Rate of pay.* Apprentices will be permitted to work at less than the predetermined rate for the work they perform when they are employed pursuant to and individually registered in a bona fide apprenticeship program registered with the U.S. Department of Labor, Employment and Training Administration, Office of Apprenticeship (OA), or with a State Apprenticeship Agency recognized by the OA. A person who is not individually registered in the program, but who has been certified by the OA or a State Apprenticeship Agency (where appropriate) to be eligible for probationary employment as an apprentice, will be permitted to work at less than the predetermined rate for the work they perform in the first 90 days of probationary employment as an apprentice in such a program. In the event the OA or a State Apprenticeship Agency recognized by the OA withdraws approval of an apprenticeship program, the contractor will no longer be permitted to use apprentices at less than the applicable predetermined rate for the work performed until an acceptable program is approved.

(2) *Fringe benefits.* Apprentices must be paid fringe benefits in accordance with the provisions of the apprenticeship program. If the apprenticeship program does not specify fringe benefits, apprentices must be paid the full amount of fringe benefits listed on the wage determination for the applicable classification. If the Administrator determines that a different practice prevails for the applicable apprentice classification, fringe benefits must be paid in accordance with that determination.

(3) *Apprenticeship ratio.* The allowable ratio of apprentices to journeyworkers on the job site in any craft classification must not be greater than the ratio permitted to the contractor as to the entire work force under the registered program or the ratio applicable to the locality of the project pursuant to paragraph 4.a.(4) of this section. Any worker listed on a payroll at an apprentice wage rate, who is not registered or otherwise employed as stated in paragraph 4.a.(1) of this section, must be paid not less than the applicable wage rate on the wage determination for the classification of work actually performed. In addition, any apprentice performing work on the job site in excess of the ratio permitted under this section must be paid not less than the applicable wage rate on the wage determination for the work actually performed.

(4) *Reciprocity of ratios and wage rates.* Where a contractor is performing construction on a project in a locality other than the locality in which its program is registered, the ratios and wage rates (expressed in percentages of the journeyworker's hourly rate) applicable within the locality in which the construction is being performed must be observed. If there is no applicable ratio or wage rate for the locality of the project, the ratio and wage rate specified in the contractor's registered program must be observed.

b. *Equal employment opportunity.* The use of apprentices and journeyworkers under this part must be in conformity with 29 CFR part 30, including any amendments thereto.

c. Apprentices and Trainees (programs of the U.S. DOT).

Apprentices and trainees working under apprenticeship and skill training programs which have been certified by the Secretary of Transportation as promoting EEO in connection with Federal-aid highway construction programs are not subject to the requirements of paragraph 4 of this Section III. 23 CFR 230.111(e)(2). The straight time hourly wage rates for apprentices and trainees under such programs will be established by the particular programs. The ratio of apprentices and trainees to journeyworkers shall not be greater than permitted by the terms of the particular program.

5. Compliance with Copeland Act requirements. The contractor shall comply with the requirements of 29 CFR part 3, which are incorporated by reference in this contract as provided in 29 CFR 5.5.

6. Subcontracts. The contractor or subcontractor must insert in any subcontracts the clauses set forth in paragraphs (1) through (11) of this section, along with the applicable wage determination(s) and such other clauses or contract modifications as the contracting agency may by appropriate instructions require, and a clause requiring the subcontractors to include these clauses and wage determination(s) in any lower tier subcontracts. The prime contractor is responsible for the compliance by any subcontractor or lower tier subcontractor with all the contract clauses in this section. In the event of any violations of these clauses, the prime contractor and any subcontractor(s) responsible will be liable for any unpaid wages and monetary relief, including interest from the date of the underpayment or loss, due to any workers of lower-tier subcontractors, and may be subject to debarment, as appropriate. 29 CFR 5.5.

7. Contract termination: debarment. A breach of the contract clauses in 29 CFR 5.5 may be grounds for termination of the

contract, and for debarment as a contractor and a subcontractor as provided in 29 CFR 5.12.

8. Compliance with Davis-Bacon and Related Act requirements. All rulings and interpretations of the Davis-Bacon and Related Acts contained in 29 CFR parts 1, 3, and 5 are herein incorporated by reference in this contract as provided in 29 CFR 5.5.

9. Disputes concerning labor standards. As provided in 29 CFR 5.5, disputes arising out of the labor standards provisions of this contract shall not be subject to the general disputes clause of this contract. Such disputes shall be resolved in accordance with the procedures of the Department of Labor set forth in 29 CFR parts 5, 6, and 7. Disputes within the meaning of this clause include disputes between the contractor (or any of its subcontractors) and the contracting agency, the U.S. Department of Labor, or the employees or their representatives.

10. Certification of eligibility. a. By entering into this contract, the contractor certifies that neither it nor any person or firm who has an interest in the contractor's firm is a person or firm ineligible to be awarded Government contracts by virtue of 40 U.S.C. 3144(b) or § 5.12(a).

b. No part of this contract shall be subcontracted to any person or firm ineligible for award of a Government contract by virtue of 40 U.S.C. 3144(b) or § 5.12(a).

c. The penalty for making false statements is prescribed in the U.S. Code, Title 18 Crimes and Criminal Procedure, 18 U.S.C. 1001.

11. Anti-retaliation. It is unlawful for any person to discharge, demote, intimidate, threaten, restrain, coerce, blacklist, harass, or in any other manner discriminate against, or to cause any person to discharge, demote, intimidate, threaten, restrain, coerce, blacklist, harass, or in any other manner discriminate against, any worker or job applicant for:

a. Notifying any contractor of any conduct which the worker reasonably believes constitutes a violation of the DBA, Related Acts, this part, or 29 CFR part 1 or 3;

b. Filing any complaint, initiating or causing to be initiated any proceeding, or otherwise asserting or seeking to assert on behalf of themselves or others any right or protection under the DBA, Related Acts, this part, or 29 CFR part 1 or 3;

c. Cooperating in any investigation or other compliance action, or testifying in any proceeding under the DBA, Related Acts, this part, or 29 CFR part 1 or 3; or

d. Informing any other person about their rights under the DBA, Related Acts, this part, or 29 CFR part 1 or 3.

IV. CONTRACT WORK HOURS AND SAFETY STANDARDS ACT

Pursuant to 29 CFR 5.5(b), the following clauses apply to any Federal-aid construction contract in an amount in excess of $100,000 and subject to the overtime provisions of the Contract Work Hours and Safety Standards Act. These clauses shall be inserted in addition to the clauses required by 29 CFR 5.5(a) or 29 CFR 4.6. As used in this paragraph, the terms laborers and mechanics include watchpersons and guards.

1. Overtime requirements. No contractor or subcontractor contracting for any part of the contract work which may require or involve the employment of laborers or mechanics shall require or permit any such laborer or mechanic in any workweek in which he or she is employed on such work to work in excess of forty hours in such workweek unless such laborer or mechanic receives compensation at a rate not less than one and one-half times the basic rate of pay for all hours worked in excess of forty hours in such workweek. 29 CFR 5.5.

2. Violation; liability for unpaid wages; liquidated damages. In the event of any violation of the clause set forth in paragraph 1. of this section the contractor and any subcontractor responsible therefor shall be liable for the unpaid wages and interest from the date of the underpayment. In addition, such contractor and subcontractor shall be liable to the United States (in the case of work done under contract for the District of Columbia or a territory, to such District or to such territory), for liquidated damages. Such liquidated damages shall be computed with respect to each individual laborer or mechanic, including watchpersons and guards, employed in violation of the clause set forth in paragraph 1. of this section, in the sum currently provided in 29 CFR 5.5(b)(2)* for each calendar day on which such individual was required or permitted to work in excess of the standard workweek of forty hours without payment of the overtime wages required by the clause set forth in paragraph 1. of this section.

* $33 as of January 15, 2025 (See 90 FR 1859) as may be adjusted annually by the Department of Labor, pursuant to the Federal Civil Penalties Inflation Adjustment Act of 1990.

3. Withholding for unpaid wages and liquidated damages

a. *Withholding process.* The FHWA or the contracting agency may, upon its own action, or must, upon written request of an authorized representative of the Department of Labor, withhold or cause to be withheld from the contractor so much of the accrued payments or advances as may be considered necessary to satisfy the liabilities of the prime contractor or any subcontractor for any unpaid wages; monetary relief, including interest; and liquidated damages required by the clauses set forth in this section on this contract, any other Federal contract with the same prime contractor, or any other federally assisted contract subject to the Contract Work Hours and Safety Standards Act that is held by the same prime contractor (as defined in § 5.2). The necessary funds may be withheld from the contractor under this contract, any other Federal contract with the same prime contractor, or any other federally assisted contract that is subject to the Contract Work Hours and Safety Standards Act and is held by the same prime contractor, regardless of whether the other contract was awarded or assisted by the same agency, and such funds may be used to satisfy the contractor liability for which the funds were withheld.

b. *Priority to withheld funds.* The Department has priority to funds withheld or to be withheld in accordance with Section III paragraph 2.a. or paragraph 3.a. of this section, or both, over claims to those funds by:

(1) A contractor's surety(ies), including without limitation performance bond sureties and payment bond sureties;

(2) A contracting agency for its reprocurement costs;

(3) A trustee(s) (either a court-appointed trustee or a U.S. trustee, or both) in bankruptcy of a contractor, or a contractor's bankruptcy estate;

(4) A contractor's assignee(s);

(5) A contractor's successor(s); or

(6) A claim asserted under the Prompt Payment Act, 31 U.S.C. 3901–3907.

4. Subcontracts. The contractor or subcontractor must insert in any subcontracts the clauses set forth in paragraphs 1. through 5. of this section and a clause requiring the subcontractors to include these clauses in any lower tier subcontracts. The prime contractor is responsible for compliance by any subcontractor or lower tier subcontractor with the clauses set forth in paragraphs 1. through 5. In the event of any violations of these clauses, the prime contractor and any subcontractor(s) responsible will be liable for any unpaid wages and monetary relief, including interest from the date of the underpayment or loss, due to any workers of lower-tier subcontractors, and associated liquidated damages and may be subject to debarment, as appropriate.

5. Anti-retaliation. It is unlawful for any person to discharge, demote, intimidate, threaten, restrain, coerce, blacklist, harass, or in any other manner discriminate against, or to cause any person to discharge, demote, intimidate, threaten, restrain, coerce, blacklist, harass, or in any other manner discriminate against, any worker or job applicant for:

a. Notifying any contractor of any conduct which the worker reasonably believes constitutes a violation of the Contract Work Hours and Safety Standards Act (CWHSSA) or its implementing regulations in this part;

b. Filing any complaint, initiating or causing to be initiated any proceeding, or otherwise asserting or seeking to assert on behalf of themselves or others any right or protection under CWHSSA or this part;

c. Cooperating in any investigation or other compliance action, or testifying in any proceeding under CWHSSA or this part; or

d. Informing any other person about their rights under CWHSSA or this part.

V. SUBLETTING OR ASSIGNING THE CONTRACT

This provision is applicable to all Federal-aid construction contracts on the National Highway System pursuant to 23 CFR 635.116.

1. The contractor shall perform with its own organization contract work amounting to not less than 30 percent (or a greater percentage if specified elsewhere in the contract) of the total original contract price, excluding any specialty items designated by the contracting agency. Specialty items may be performed by subcontract and the amount of any such specialty items performed may be deducted from the total original contract price before computing the amount of work required to be performed by the contractor's own organization (23 CFR 635.116).

a. The term “perform work with its own organization” in paragraph 1. of this section refers to workers employed or leased by the prime contractor, and equipment owned or rented by the prime contractor, with or without operators. Such term does not include employees or equipment of a subcontractor or lower tier subcontractor, agents of the prime contractor, or any other assignees. The term may include payments for the costs of hiring leased employees from an employee leasing firm meeting all relevant Federal and State regulatory requirements. Leased employees may only be included in this term if the prime contractor meets all of the following conditions: (based on longstanding interpretation)

(1) the prime contractor maintains control over the supervision of the day-to-day activities of the leased employees;
(2) the prime contractor remains responsible for the quality of the work of the leased employees;
(3) the prime contractor retains all power to accept or exclude individual employees from work on the project; and
(4) the prime contractor remains ultimately responsible for the payment of predetermined minimum wages, the submission of payrolls, statements of compliance and all other Federal regulatory requirements.

b. "Specialty Items" shall be construed to be limited to work that requires highly specialized knowledge, abilities, or equipment not ordinarily available in the type of contracting organizations qualified and expected to bid or propose on the contract as a whole and in general are to be limited to minor components of the overall contract. 23 CFR 635.102.

2. Pursuant to 23 CFR 635.116(a), the contract amount upon which the requirements set forth in paragraph 1. of this section is computed includes the cost of material and manufactured products which are to be purchased or produced by the contractor under the contract provisions.

3. Pursuant to 23 CFR 635.116(c), the contractor shall furnish (a) a competent superintendent or supervisor who is employed by the firm, has full authority to direct performance of the work in accordance with the contract requirements, and is in charge of all construction operations (regardless of who performs the work) and (b) such other of its own organizational resources (supervision, management, and engineering services) as the contracting officer determines is necessary to assure the performance of the contract.

4. No portion of the contract shall be sublet, assigned or otherwise disposed of except with the written consent of the contracting officer, or authorized representative, and such consent when given shall not be construed to relieve the contractor of any responsibility for the fulfillment of the contract. Written consent will be given only after the contracting agency has assured that each subcontract is evidenced in writing and that it contains all pertinent provisions and requirements of the prime contract. (based on long-standing interpretation of 23 CFR 635.116).

5. The 30-percent self-performance requirement of paragraph (1) is not applicable to design-build contracts; however,

contracting agencies may establish their own self-performance requirements. 23 CFR 635.116(d).

VI. SAFETY: ACCIDENT PREVENTION

This provision is applicable to all Federal-aid construction contracts and to all related subcontracts.

1. In the performance of this contract the contractor shall comply with all applicable Federal, State, and local laws governing safety, health, and sanitation (23 CFR Part 635). The contractor shall provide all safeguards, safety devices and protective equipment and take any other needed actions as it determines, or as the contracting officer may determine, to be reasonably necessary to protect the life and health of employees on the job and the safety of the public and to protect property in connection with the performance of the work covered by the contract. 23 CFR 635.108.

2. It is a condition of this contract, and shall be made a condition of each subcontract, which the contractor enters into pursuant to this contract, that the contractor and any subcontractor shall not permit any employee, in performance of the contract, to work in surroundings or under conditions which are unsanitary, hazardous or dangerous to his/her health or safety, as determined under construction safety and health standards (29 CFR Part 1926) promulgated by the Secretary of Labor, in accordance with Section 107 of the Contract Work Hours and Safety Standards Act (40 U.S.C. 3704). 29 CFR 1926.10.

3. Pursuant to 29 CFR 1926.3, it is a condition of this contract that the Secretary of Labor or authorized representative thereof, shall have right of entry to any site of contract performance to inspect or investigate the matter of compliance with the construction safety and health standards and to carry out the duties of the Secretary under Section 107 of the Contract Work Hours and Safety Standards Act (40 U.S.C. 3704).

VII. FALSE STATEMENTS CONCERNING HIGHWAY PROJECTS

This provision is applicable to all Federal-aid construction contracts and to all related subcontracts.

In order to assure high quality and durable construction in conformity with approved plans and specifications and a high degree of reliability on statements and representations made by engineers, contractors, suppliers, and workers on Federal-aid highway projects, it is essential that all persons concerned with the project perform their functions as carefully, thoroughly, and honestly as possible. Willful falsification, distortion, or misrepresentation with respect to any facts related to the project is a violation of Federal law. To prevent any misunderstanding regarding the seriousness of these and similar acts, Form FHWA-1022 shall be posted on each Federal-aid highway project (23 CFR Part 635) in one or more places where it is readily available to all persons concerned with the project:

18 U.S.C. 1020 reads as follows:

"Whoever, being an officer, agent, or employee of the United States, or of any State or Territory, or whoever, whether a person, association, firm, or corporation, knowingly makes any false statement, false representation, or false report as to the character, quality, quantity, or cost of the material used or to be used, or the quantity or quality of the work performed or to be performed, or the cost thereof in connection with the submission of plans, maps, specifications, contracts, or costs of construction on any highway or related project submitted for approval to the Secretary of Transportation; or

Whoever knowingly makes any false statement, false representation, false report or false claim with respect to the character, quality, quantity, or cost of any work performed or to be performed, or materials furnished or to be furnished, in connection with the construction of any highway or related project approved by the Secretary of Transportation; or

Whoever knowingly makes any false statement or false representation as to material fact in any statement, certificate, or report submitted pursuant to provisions of the Federal-aid Roads Act approved July 11, 1916, (39 Stat. 355), as amended and supplemented;

Shall be fined under this title or imprisoned not more than 5 years or both."

VIII. IMPLEMENTATION OF CLEAN AIR ACT AND FEDERAL WATER POLLUTION CONTROL ACT (42 U.S.C. 7606; 2 CFR 200.88; EO 11738)

This provision is applicable to all Federal-aid construction contracts in excess of $150,000 and to all related subcontracts. 48 CFR 2.101; 2 CFR 200.327.

By submission of this bid/proposal or the execution of this contract or subcontract, as appropriate, the bidder, proposer, Federal-aid construction contractor, subcontractor, supplier, or vendor agrees to comply with all applicable standards, orders or regulations issued pursuant to the Clean Air Act (42 U.S.C. 7401-7671q) and the Federal Water Pollution Control Act, as amended (33 U.S.C. 1251-1387). Violations must be reported to the Federal Highway Administration and the Regional Office of the Environmental Protection Agency. 2 CFR Part 200, Appendix II.

The contractor agrees to include or cause to be included the requirements of this Section in every subcontract, and further agrees to take such action as the contracting agency may direct as a means of enforcing such requirements. 2 CFR 200.327.

IX. CERTIFICATION REGARDING DEBARMENT, SUSPENSION, INELIGIBILITY AND VOLUNTARY EXCLUSION

This provision is applicable to all Federal-aid construction contracts, design-build contracts, subcontracts, lower-tier subcontracts, purchase orders, lease agreements, consultant contracts or any other covered transaction requiring FHWA approval or that is estimated to cost $25,000 or more – as defined in 2 CFR Parts 180 and 1200. 2 CFR 180.220 and 1200.220.

1**. Instructions for Certification – First Tier Participants:**

a. By signing and submitting this proposal, the prospective first tier participant is providing the certification set out below.

b. The inability of a person to provide the certification set out below will not necessarily result in denial of participation in this

covered transaction. The prospective first tier participant shall submit an explanation of why it cannot provide the certification set out below. The certification or explanation will be considered in connection with the department or agency's determination whether to enter into this transaction. However, failure of the prospective first tier participant to furnish a certification or an explanation shall disqualify such a person from participation in this transaction. 2 CFR 180.320.

c. The certification in this clause is a material representation of fact upon which reliance was placed when the contracting agency determined to enter into this transaction. If it is later determined that the prospective participant knowingly rendered an erroneous certification, in addition to other remedies available to the Federal Government, the contracting agency may terminate this transaction for cause of default. 2 CFR 180.325.

d. The prospective first tier participant shall provide immediate written notice to the contracting agency to whom this proposal is submitted if any time the prospective first tier participant learns that its certification was erroneous when submitted or has become erroneous by reason of changed circumstances. 2 CFR 180.345 and 180.350.

e. The terms "covered transaction," "debarred," "suspended," "ineligible," "participant," "person," "principal," and "voluntarily excluded," as used in this clause, are defined in 2 CFR Parts 180, Subpart I, 180.900-180.1020, and 1200. “First Tier Covered Transactions” refers to any covered transaction between a recipient or subrecipient of Federal funds and a participant (such as the prime or general contract). “Lower Tier Covered Transactions” refers to any covered transaction under a First Tier Covered Transaction (such as subcontracts). “First Tier Participant” refers to the participant who has entered into a covered transaction with a recipient or subrecipient of Federal funds (such as the prime or general contractor). “Lower Tier Participant” refers any participant who has entered into a covered transaction with a First Tier Participant or other Lower Tier Participants (such as subcontractors and suppliers).

f. The prospective first tier participant agrees by submitting this proposal that, should the proposed covered transaction be entered into, it shall not knowingly enter into any lower tier covered transaction with a person who is debarred, suspended, declared ineligible, or voluntarily excluded from participation in this covered transaction, unless authorized by the department or agency entering into this transaction. 2 CFR 180.330.

g. The prospective first tier participant further agrees by submitting this proposal that it will include the clause titled "Certification Regarding Debarment, Suspension, Ineligibility and Voluntary Exclusion-Lower Tier Covered Transactions," provided by the department or contracting agency, entering into this covered transaction, without modification, in all lower tier covered transactions and in all solicitations for lower tier covered transactions exceeding the $25,000 threshold. 2 CFR 180.220 and 180.300.

h. A participant in a covered transaction may rely upon a certification of a prospective participant in a lower tier covered transaction that is not debarred, suspended, ineligible, or voluntarily excluded from the covered transaction, unless it knows that the certification is erroneous. 2 CFR 180.300; 180.320, and 180.325. A participant is responsible for ensuring that its principals are not suspended, debarred, or otherwise ineligible to participate in covered transactions. 2 CFR 180.335. To verify the eligibility of its principals, as well as the eligibility of any lower tier prospective participants, each participant may, but is not required to, check the System for Award Management website (https://www.sam.gov/). 2 CFR 180.300, 180.320, and 180.325.

i. Nothing contained in the foregoing shall be construed to require the establishment of a system of records in order to render in good faith the certification required by this clause. The knowledge and information of the prospective participant is not required to exceed that which is normally possessed by a prudent person in the ordinary course of business dealings.

j. Except for transactions authorized under paragraph (f) of these instructions, if a participant in a covered transaction knowingly enters into a lower tier covered transaction with a person who is suspended, debarred, ineligible, or voluntarily excluded from participation in this transaction, in addition to other remedies available to the Federal Government, the department or agency may terminate this transaction for cause or default. 2 CFR 180.325.

* * * * *

2. Certification Regarding Debarment, Suspension, Ineligibility and Voluntary Exclusion – First Tier Participants:

a. The prospective first tier participant certifies to the best of its knowledge and belief, that it and its principals:

(1) Are not presently debarred, suspended, proposed for debarment, declared ineligible, or voluntarily excluded from participating in covered transactions by any Federal department or agency, 2 CFR 180.335;

(2) Have not within a three-year period preceding this proposal been convicted of or had a civil judgment rendered against them for commission of fraud or a criminal offense in connection with obtaining, attempting to obtain, or performing a public (Federal, State, or local) transaction or contract under a public transaction; violation of Federal or State antitrust statutes or commission of embezzlement, theft, forgery, bribery, falsification or destruction of records, making false statements, or receiving stolen property, 2 CFR 180.800;

(3) Are not presently indicted for or otherwise criminally or civilly charged by a governmental entity (Federal, State or local) with commission of any of the offenses enumerated in paragraph (a)(2) of this certification, 2 CFR 180.700 and 180.800; and

(4) Have not within a three-year period preceding this application/proposal had one or more public transactions (Federal, State or local) terminated for cause or default. 2 CFR 180.335(d).

(5) Are not a corporation that has been convicted of a felony violation under any Federal law within the two-year period preceding this proposal (USDOT Order 4200.6 implementing appropriations act requirements); and

(6) Are not a corporation with any unpaid Federal tax liability that has been assessed, for which all judicial and administrative remedies have been exhausted, or have lapsed, and that is not being paid in a timely manner pursuant to an agreement with the authority responsible for collecting the tax liability (USDOT Order 4200.6 implementing appropriations act requirements).

b. Where the prospective participant is unable to certify to any of the statements in this certification, such prospective participant should attach an explanation to this proposal. 2 CFR 180.335 and 180.340.

* * * * *

3. **Instructions for Certification - Lower Tier Participants:**

(Applicable to all subcontracts, purchase orders, and other lower tier transactions requiring prior FHWA approval or estimated to cost $25,000 or more - 2 CFR Parts 180 and 1200). 2 CFR 180.220 and 1200.220.

a. By signing and submitting this proposal, the prospective lower tier participant is providing the certification set out below.

b. The certification in this clause is a material representation of fact upon which reliance was placed when this transaction was entered into. If it is later determined that the prospective lower tier participant knowingly rendered an erroneous certification, in addition to other remedies available to the Federal Government, the department, or agency with which this transaction originated may pursue available remedies, including suspension and/or debarment.

c. The prospective lower tier participant shall provide immediate written notice to the person to which this proposal is submitted if at any time the prospective lower tier participant learns that its certification was erroneous by reason of changed circumstances. 2 CFR 180.365.

d. The terms "covered transaction," "debarred," "suspended," "ineligible," "participant," "person," "principal," and "voluntarily excluded," as used in this clause, are defined in 2 CFR Parts 180, Subpart I, 180.900 – 180.1020, and 1200. You may contact the person to which this proposal is submitted for assistance in obtaining a copy of those regulations. “First Tier Covered Transactions” refers to any covered transaction between a recipient or subrecipient of Federal funds and a participant (such as the prime or general contract). “Lower Tier Covered Transactions” refers to any covered transaction under a First Tier Covered Transaction (such as subcontracts). “First Tier Participant” refers to the participant who has entered into a covered transaction with a recipient or subrecipient of Federal funds (such as the prime or general contractor). “Lower Tier Participant” refers any participant who has entered into a covered transaction with a First Tier Participant or other Lower Tier Participants (such as subcontractors and suppliers).

e. The prospective lower tier participant agrees by submitting this proposal that, should the proposed covered transaction be entered into, it shall not knowingly enter into any lower tier covered transaction with a person who is debarred, suspended, declared ineligible, or voluntarily excluded from participation in this covered transaction, unless authorized by the department or agency with which this transaction originated. 2 CFR 1200.220 and 1200.332.

f. The prospective lower tier participant further agrees by submitting this proposal that it will include this clause titled "Certification Regarding Debarment, Suspension, Ineligibility and Voluntary Exclusion-Lower Tier Covered Transaction," without modification, in all lower tier covered transactions and in all solicitations for lower tier covered transactions exceeding the $25,000 threshold. 2 CFR 180.220 and 1200.220.

g. A participant in a covered transaction may rely upon a certification of a prospective participant in a lower tier covered transaction that is not debarred, suspended, ineligible, or voluntarily excluded from the covered transaction, unless it knows that the certification is erroneous. A participant is responsible for ensuring that its principals are not suspended, debarred, or otherwise ineligible to participate in covered transactions. To verify the eligibility of its principals, as well as the eligibility of any lower tier prospective participants, each participant may, but is not required to, check the System for Award Management website (https://www.sam.gov/), which is compiled by the General Services Administration. 2 CFR 180.300, 180.320, 180.330, and 180.335.

h. Nothing contained in the foregoing shall be construed to require establishment of a system of records in order to render in good faith the certification required by this clause. The knowledge and information of participant is not required to exceed that which is normally possessed by a prudent person in the ordinary course of business dealings.

i. Except for transactions authorized under paragraph e of these instructions, if a participant in a covered transaction knowingly enters into a lower tier covered transaction with a person who is suspended, debarred, ineligible, or voluntarily excluded from participation in this transaction, in addition to other remedies available to the Federal Government, the department or agency with which this transaction originated may pursue available remedies, including suspension and/or debarment. 2 CFR 180.325.

* * * * *

4. Certification Regarding Debarment, Suspension, Ineligibility and Voluntary Exclusion--Lower Tier Participants:

a. The prospective lower tier participant certifies, by submission of this proposal, that neither it nor its principals:

(1) is presently debarred, suspended, proposed for debarment, declared ineligible, or voluntarily excluded from participating in covered transactions by any Federal department or agency, 2 CFR 180.355;

(2) is a corporation that has been convicted of a felony violation under any Federal law within the two-year period preceding this proposal (USDOT Order 4200.6 implementing appropriations act requirements); and

(3) is a corporation with any unpaid Federal tax liability that has been assessed, for which all judicial and administrative remedies have been exhausted, or have lapsed, and that is not being paid in a timely manner pursuant to an agreement with the authority responsible for collecting the tax liability. (USDOT Order 4200.6 implementing appropriations act requirements)

b. Where the prospective lower tier participant is unable to certify to any of the statements in this certification, such prospective participant should attach an explanation to this proposal.

* * * * *

X. CERTIFICATION REGARDING USE OF CONTRACT FUNDS FOR LOBBYING

This provision is applicable to all Federal-aid construction contracts and to all related subcontracts which exceed $100,000. 49 CFR Part 20, App. A.

1. The prospective participant certifies, by signing and submitting this bid or proposal, to the best of his or her knowledge and belief, that:

a. No Federal appropriated funds have been paid or will be paid, by or on behalf of the undersigned, to any person for influencing or attempting to influence an officer or employee of any Federal agency, a Member of Congress, an officer or employee of Congress, or an employee of a Member of Congress in connection with the awarding of any Federal contract, the making of any Federal grant, the making of any Federal loan, the entering into of any cooperative agreement, and the extension, continuation, renewal, amendment, or modification of any Federal contract, grant, loan, or cooperative agreement.

b. If any funds other than Federal appropriated funds have been paid or will be paid to any person for influencing or attempting to influence an officer or employee of any Federal agency, a Member of Congress, an officer or employee of Congress, or an employee of a Member of Congress in connection with this Federal contract, grant, loan, or cooperative agreement, the undersigned shall complete and submit Standard Form-LLL, "Disclosure Form to Report Lobbying," in accordance with its instructions.

2. This certification is a material representation of fact upon which reliance was placed when this transaction was made or entered into. Submission of this certification is a prerequisite for making or entering into this transaction imposed by 31 U.S.C. 1352. Any person who fails to file the required certification shall be subject to a civil penalty of not less than $10,000 and not more than $100,000 for each such failure.

3. The prospective participant also agrees by submitting its bid or proposal that the participant shall require that the language of this certification be included in all lower tier subcontracts, which exceed $100,000 and that all such recipients shall certify and disclose accordingly.

XI. USE OF UNITED STATES-FLAG VESSELS:

This provision is applicable to all Federal-aid construction contracts, design-build contracts, subcontracts, lower-tier subcontracts, purchase orders, lease agreements, or any other covered transaction. 46 CFR Part 381.

This requirement applies to material or equipment that is acquired for a specific Federal-aid highway project. 46 CFR 381.7. It is not applicable to goods or materials that come into inventories independent of an FHWA funded-contract.

When oceanic shipments (or shipments across the Great Lakes) are necessary for materials or equipment acquired for a specific Federal-aid construction project, the bidder, proposer, contractor, subcontractor, or vendor agrees:

1. To utilize privately owned United States-flag commercial vessels to ship at least 50 percent of the gross tonnage (computed separately for dry bulk carriers, dry cargo liners, and tankers) involved, whenever shipping any equipment, material, or commodities pursuant to this contract, to the extent such vessels are available at fair and reasonable rates for United States-flag commercial vessels. 46 CFR 381.7.

2. To furnish within 20 days following the date of loading for shipments originating within the United States or within 30 working days following the date of loading for shipments originating outside the United States, a legible copy of a rated, ‘on-board’ commercial ocean bill-of-lading in English for each shipment of cargo described in paragraph (b)(1) of this section to both the Contracting Officer (through the prime contractor in the case of subcontractor bills-of-lading) and to the Office of Cargo and Commercial Sealift (MAR-620), Maritime Administration, Washington, DC 20590. (MARAD requires copies of the ocean carrier's (master) bills of lading, certified onboard, dated, with rates and charges. These bills of lading may contain business sensitive information and therefore may be submitted directly to MARAD by the Ocean Transportation Intermediary on behalf of the contractor). 46 CFR 381.7.

ATTACHMENT A - EMPLOYMENT AND MATERIALS PREFERENCE FOR APPALACHIAN DEVELOPMENT HIGHWAY SYSTEM OR APPALACHIAN LOCAL ACCESS ROAD CONTRACTS (40 U.S.C. sections 14501(d) and 14701 and the Appalachian Regional Commission Code as authorized under 40 U.S.C. section 14302)
This provision is applicable to all Federal-aid projects funded under the Appalachian Regional Development Act of 1965.

1. During the performance of this contract, the contractor undertaking to do work which is, or reasonably may be, done as on-site work, shall give preference to qualified persons who regularly reside in the labor area as designated by the DOL wherein the contract work is situated, or the subregion, or the Appalachian counties of the State wherein the contract work is situated, except:

a. To the extent that qualified persons regularly residing in the area are not available.

b. For the reasonable needs of the contractor to employ supervisory or specially experienced personnel necessary to assure an efficient execution of the contract work.

c. For the obligation of the contractor to offer employment to present or former employees as the result of a lawful collective bargaining contract, provided that the number of nonresident persons employed under this subparagraph (1c) shall not exceed 20 percent of the total number of employees employed by the contractor on the contract work, except as provided in subparagraph (4) below.

2. The contractor shall place a job order with the State Employment Service indicating (a) the classifications of the laborers, mechanics and other employees required to perform the contract work, (b) the number of employees required in each classification, (c) the date on which the participant estimates such employees will be required, and (d) any other pertinent information required by the State Employment Service to complete the job order form. The job order may be placed with the State Employment Service in writing or by telephone. If during the course of the contract work, the information submitted by the contractor in the original job order is substantially modified, the participant shall promptly notify the State Employment Service.

3. The contractor shall give full consideration to all qualified job applicants referred to him by the State Employment Service. The contractor is not required to grant employment to any job applicants who, in his opinion, are not qualified to perform the classification of work required.

4. If, within one week following the placing of a job order by the contractor with the State Employment Service, the State Employment Service is unable to refer any qualified job applicants to the contractor, or less than the number requested, the State Employment Service will forward a certificate to the contractor indicating the unavailability of applicants. Such certificate shall be made a part of the contractor's permanent project records. Upon receipt of this certificate, the contractor may employ persons who do not normally reside in the labor area to fill positions covered by the certificate, notwithstanding the provisions of subparagraph (1c) above.

5. The provisions of 40 U.S.C. 14501 allow the contracting agency to provide a contractual preference for the use of mineral resource materials native to the Appalachian region.

6. The contractor shall include the provisions of Sections 1 through 4 of this Attachment A in every subcontract for work which is, or reasonably may be, done as on-site work.

"General Decision Number: VT20260058 05/18/2026

State: Vermont

Construction Types: Highway

Counties: Vermont Counties of
Windsor

Modification Number	Publication Date
0	01/02/2026
1	05/18/2026

SUVT2017-019 08/06/2019

	Rates	Fringes
TRUCK DRIVER: DISTRIBUTOR TRUCK	$ 22.32	0.00
TRUCK DRIVER, INCLUDES ALL AXLES INCLUDING DUMP TRUCKS	$ 18.60	3.58
TRAFFIC CONTROL: LABORER-CONES/ BARRICADES/BARRELS - SETTER/MOVER/SWEEPER	$ 17.42	7.11
TRAFFIC CONTROL: FLAGGER	$ 11.15	4.40
OPERATOR: SCREED	$ 20.78	10.07
OPERATOR: ROLLER	$ 22.55	9.48
OPERATOR: POUNDER	$ 20.70	3.78
OPERATOR: PAVER (ASPHALT, AGGREGATE, AND CONCRETE)	$ 23.09	8.53
OPERATOR: MILLING MACHINE	$ 28.76	16.77
OPERATOR: MECHANIC	$ 20.45	4.54
OPERATOR: LOADER	$ 22.29	4.48
OPERATOR: GRADER/BLADE	$ 20.91	5.79
OPERATOR: DRILL	$ 20.23	4.50
OPERATOR: CRANE	$ 22.48	3.00
OPERATOR: BULLDOZER	$ 20.71	0.92
OPERATOR: BROOM/SWEEPER	$ 19.94	6.29
OPERATOR: BOBCAT/SKID STEER/SKID LOADER	$ 21.15	12.05
OPERATOR: BACKHOE/EXCAVATOR/TRACKHOE	$ 22.87	3.07
LABORER: COMMON OR GENERAL, INCLUDING ASPHALT RAKING, SHOVELING, SPREADING AND CONCRETE WORK	$ 16.85	3.90
IRONWORKER, STRUCTURAL	$ 28.97	8.72
IRONWORKER, REINFORCING	$ 21.00	4.92
INSTALLER - SIGN	$ 18.50	5.52
HIGHWAY/PARKING LOT STRIPING: PAINTER	$ 20.80	4.62
ELECTRICIAN	$ 28.28	1.90
CEMENT MASON/CONCRETE FINISHER	$ 25.34	0.00
CARPENTER, INCLUDES FORM WORK	$ 20.46	3.65

WELDERS - Receive rate prescribed for craft performing operation to which welding is incidental.

==========

Note: Executive Order (EO) 13706, Establishing Paid Sick Leave for Federal Contractors applies to all contracts subject to the Davis-Bacon Act for which the contract is awarded (and any

solicitation was issued) on or after January 1, 2017. If this contract is covered by the EO, the contractor must provide employees with 1 hour of paid sick leave for every 30 hours they work, up to 56 hours of paid sick leave each year. Employees must be permitted to use paid sick leave for their own illness, injury or other health-related needs, including preventive care; to assist a family member (or person who is like family to the employee) who is ill, injured, or has other health-related needs, including preventive care; or for reasons resulting from, or to assist a family member (or person who is like family to the employee) who is a victim of, domestic violence, sexual assault, or stalking. Additional information on contractor requirements and worker protections under the EO is available at https://www.dol.gov/agencies/whd/government-contracts.

Note: Executive Order 13658 generally applies to contracts subject to the Davis-Bacon Act that were awarded on or between January 1, 2015 and January 29, 2022, and that have not been renewed or extended on or after January 30, 2022. Executive Order 13658 does not apply to contracts subject only to the Davis-Bacon Related Acts regardless of when they were awarded. If a contract is subject to Executive Order 13658, the contractor must pay all covered workers at least $13.65 per hour (or the applicable wage rate listed on this wage determination, if it is higher) for all hours spent performing on the contract from May 11, 2026, through December 31, 2026. The applicable Executive Order minimum wage rate will be adjusted annually. Additional information on contractor requirements and worker protections under Executive Order 13658 is available at www.dol.gov/whd/govcontracts.

Unlisted classifications needed for work not included within the scope of the classifications listed may be added after award only as provided in the labor standards contract clauses (29CFR 5.5 (a) (1) (iii)).

The body of each wage determination lists the classifications and wage rates that have been found to be prevailing for the type(s) of construction and geographic area covered by the wage determination. The classifications are listed in alphabetical order under rate identifiers indicating whether the particular rate is a union rate (current union negotiated rate), a survey rate, a weighted union average rate, a state adopted rate, or a supplemental classification rate.

Union Rate Identifiers

A four-letter identifier beginning with characters other than ⍰SU⍰, ⍰UAVG⍰, ⍰SA⍰, or ⍰SC⍰ denotes that a union rate was prevailing for that classification in the survey. Example: PLUM0198-005 07/01/2024. PLUM is an identifier of the union whose collectively bargained rate prevailed in the survey for this classification, which in this example would be Plumbers. 0198 indicates the local union number or district council number where applicable, i.e., Plumbers Local 0198. The next number, 005 in the example, is an internal number used in processing the wage determination. The date, 07/01/2024 in the example, is the effective date of the most current negotiated rate.

Union prevailing wage rates are updated to reflect all changes over time that are reported to WHD in the rates in the collective bargaining agreement (CBA) governing the classification.

Union Average Rate Identifiers

The UAVG identifier indicates that no single rate prevailed for those classifications, but that 100% of the data reported for the classifications reflected union rates. EXAMPLE: UAVG-OH-0010 01/01/2024. UAVG indicates that the rate is a weighted union average rate. OH indicates the State of Ohio. The next number, 0010 in the example, is an internal number used in producing the wage determination. The date, 01/01/2024 in the example, indicates the date the wage determination was updated to reflect the most current union average rate.

A UAVG rate will be updated once a year, usually in January, to reflect a weighted average of the current rates in the collective bargaining agreements on which the rate is based.

Survey Rate Identifiers

The ⿰SU⿰ identifier indicates that either a single non-union rate prevailed (as defined in 29 CFR 1.2) for this classification in the survey or that the rate was derived by computing a weighted average rate based on all the rates reported in the survey for that classification. As a weighted average rate includes all rates reported in the survey, it may include both union and non-union rates. Example: SUFL2022-007 6/27/2024. SU indicates the rate is a single non-union prevailing rate or a weighted average of survey data for that classification. FL indicates the State of Florida. 2022 is the year of the survey on which these classifications and rates are based. The next number, 007 in the example, is an internal number used in producing the wage determination. The date, 6/27/2024 in the example, indicates the survey completion date for the classifications and rates under that identifier.

⿰SU⿰ wage rates typically remain in effect until a new survey is conducted. However, the Wage and Hour Division (WHD) has the discretion to update such rates under 29 CFR 1.6(c)(1).

State Adopted Rate Identifiers

The ⿰SA⿰ identifier indicates that the classifications and prevailing wage rates set by a state (or local) government were adopted under 29 C.F.R 1.3(g)-(h). Example: SAME2023-007 01/03/2024. SA reflects that the rates are state adopted. ME refers to the State of Maine. 2023 is the year during which the state completed the survey on which the listed classifications and rates are based. The next number, 007 in the example, is an internal number used in producing the wage determination. The date, 01/03/2024 in the example, reflects the date on which the classifications and rates under the ⿰SA⿰ identifier took effect under state law in the state from which the rates were adopted.

WAGE DETERMINATION APPEALS PROCESS

1) Has there been an initial decision in the matter? This can be:

a) a survey underlying a wage determination
b) an existing published wage determination
c) an initial WHD letter setting forth a position on a wage determination matter
d) an initial conformance (additional classification and rate) determination

On survey related matters, initial contact, including requests for summaries of surveys, should be directed to the WHD Branch of Wage Surveys. Requests can be submitted via email to

davisbaconinfo@dol.gov or by mail to:
Branch of Wage Surveys
Wage and Hour Division
U.S. Department of Labor
200 Constitution Avenue, N.W.
Washington, DC 20210

Regarding any other wage determination matter such as conformance decisions, requests for initial decisions should be directed to the WHD Branch of Construction Wage Determinations. Requests can be submitted via email to BCWD-Office@dol.gov or by mail to:
Branch of Construction Wage Determinations
Wage and Hour Division
U.S. Department of Labor
200 Constitution Avenue, N.W.
Washington, DC 20210

2) If an initial decision has been issued, then any interested party (those affected by the action) that disagrees with the decision can request review and reconsideration from the Wage and Hour Administrator (See 29 CFR Part 1.8 and 29 CFR Part 7). Requests for review and reconsideration can be submitted via email to dba.reconsideration@dol.gov or by mail to:
Wage and Hour Administrator
U.S. Department of Labor
200 Constitution Avenue, N.W.
Washington, DC 20210

The request should be accompanied by a full statement of the interested party's position and any information (wage payment data, project description, area practice material, etc.) that the requestor considers relevant to the issue.

3) If the decision of the Administrator is not favorable, an interested party may appeal directly to the Administrative Review Board (formerly the Wage Appeals Board). Write to:
Administrative Review Board
U.S. Department of Labor
200 Constitution Avenue, N.W.
Washington, DC 20210.

==========

END OF GENERAL DECISION

"

VERMONT AGENCY OF TRANSPORTATION

BIDDING REQUIREMENTS AND CONDITIONS

EFFECTIVE

JULY 15, 2026

1 REQUIREMENT FOR PREQUALIFICATION

Two processes, Annual and Contract Specific Prequalification, while separate and distinct, are often referred to – both collectively and individually – as "Prequalification." Prequalification shall be required for prime contractors to bid on design-bid-build projects.

2 BID PREPARATION

A. General. Unless otherwise specifically directed, bids shall only be submitted via the electronic bidding platform provided within iCXWeb. Each submission must be completed and signed/submitted by an individual authorized to sign legal documents for the bidding entity.

By submitting a bid electronically, the Bidder acknowledges and confirms that it has read and understands the terms and conditions included in the Proposal, Plans, Standard Specifications, and Special Provisions; and such documentation has been taken into account and is part of this bid.

Bidder further certifies that it has read and understands any and all Addenda issued relative to this Proposal and such Addenda have been taken into account and are a part of this bid.

B. Summation of Pay Items. Submitted bids will be considered and confirmed on the basis of the summation of the products of the quantities shown in each pay item multiplied by the unit prices bid.

C. Fraction of a Cent Unit Costs. Computing Bid Results. When Proposals have unit cost bid items submitted for a fraction of a cent, the total cost for the quantity of the item shall be determined by carrying price computations out through the third digit after the decimal point. The fourth digit shall be dropped with no rounding off onto the third digit. All bid results shall be computed on this basis for purposes of determining the low bidder.

D. Bid Items With Zero and Other Obviously Below Cost Bids.

1. If a bidder submits a unit bid price of zero for a contract bid item, the bid will be declared informal. The current electronic bid platform is designed to not allow a zero-bid amount.

2. A bidder may submit a unit bid price that is obviously below the cost of the item. If the Agency awards and enters into a contract with a bidder that has submitted a unit bid price that is obviously below cost, the contractor shall be obligated to perform the work under such item as indicated in the contract documents and/or as directed by the Engineer.

E. Optional Bid Items. When "Optional Bid Items" are indicated in the Proposal, bidders shall bid on only one pay item in each group of options, leaving the other pay items in the group without a unit bid price. If a bidder enters more than one unit price bid in a group of options, only the bidder selected option will be utilized as the basis of calculation for determining the low bidder and used in the contract.

F. Alternate Bid Items. When "Alternate Bid Items" are indicated in the Proposal, bidders must bid on all pay items in each group of “Alternate Bid Items.” Failure to bid on all of the "Alternate Bid Items" will prevent the bid from being submitted.

G. Additive Alternate Bid Items. When "Additive Alternate Bid Items" are indicated in the Proposal, bidders must bid on all pay items in each group of “Additive Alternate Bid Items.” Failure to bid on all of the "Additive Alternate Bid Items" will prevent the bid from being submitted.
If an award is made, the State will award one of the following, in this order of priority, maximizing the available funding:

1. Base Items only

2. Base Items plus Additive Alternate 1

3. Base Items plus Additive Alternate 1 and Additive Alternate 2

4. Base Items plus previous sequential Additive Alternates to include all of the Additive Alternates in numeric order

H. Quantity of One; Unit Bid Price; Not a Bid Item (N.A.B.I.) When the Schedule of Items for a contract contains one or more pay items which have a quantity of one (1) and a unit price and total price entered, the Agency has set a unit price in the event such an item is used. If such an item is determined to be needed by the Engineer, the work will be

performed by the contractor according to the contract documents at the unit price listed.

I. Incidental to Other Contract Items. When it is indicated in the contract documents that payment or costs of work and/or materials are incidental to one or more other contract items (but not to specific other items), such costs shall be included by the bidder in the price bid for all other contract items.

3 BID SUBMISSION

A. Bids shall be submitted electronically utilizing the Agency's electronic bidding platform.

B. By submitting an electronic bid, the bidder certifies that it has read, understands, accepts, acknowledges, and agrees to comply with all statements, conditions and specifications in the electronic bid submittal.

C. A bidder submitting a bid is solely responsible for that submission. They have the financial wherewithal and are physically organized and equipped to undertake and complete the contract.

D. Claims will not be accepted and bid openings will not be postponed due to fault on the part of a bidder in preparing and submitting a bid in a timely manner.

4 BID BOND

A. General. A Bid Bond is a Proposal Guaranty that must be secured by each Bidder through Surety 2000 or SurePath. The amount shall be as indicated on the cover page of the Proposal. Typically, this amount is 5% of the Contractor's bid. The Bond Number must be entered into the bidding software prior to submitting a bid. The bidding software will automatically verify the bond through the system.

The Bid Bond shall list:

1. Obligee: Vermont Agency of Transportation

2. Obligee Address: 219 North Main St., Barre, VT 05641

3. Bid Date: Date of Bid Opening

4. Contract ID: Contract Number. This will be in the format: C<zero>XXXX (C0XXXX).

5. Company Number: The unique 4-digit company number can be found by logging into iCXWeb and clicking on the Menu>Company>Details Tab.

5 BIDDER DISQUALIFICATION

Bidders may be disqualified for various reasons, including:

A. Submission of more than one Bid for the same work by an entity under the same or different names;

B. Evidence of collusion among bidders; or

C. Any other cause for suspension or debarment as detailed in the Agency's Policy and Procedures on Debarment, Code of Vermont Rules (CVR), Volume 8A, 14 010 004, Pages 1-10. All bidders must complete the Debarment and Non-Collusion Affidavit included in the bidding software prior to submitting a bid. This affidavit (a sworn statement signed by or on behalf of the entity to which a contract may be awarded) certifies that the entity, including all parties to a joint venture, has neither directly nor indirectly entered into any agreement, participated in any collusion, or otherwise taken any action in restraint of free competitive bidding in conjunction with the proposed contract and has not been suspended, indicted, convicted, or had a civil judgment rendered against it within three (3) years of the bid opening date for the proposed contract. The statement must be sworn to before a person who is authorized to administer oaths. The completed Debarment and Non-Collusion Affidavit must be completed in iCXWeb prior to bid submission.

6 BID REJECTION

A. General. A Bid may be rejected at any time between bid opening and contract execution. The Agency may reject any or all Bids, waive any or all technicalities, and/or advertise for new Bids if in its sole judgment, or that of the awarding authority, the best interests of the State, or the awarding authority, will be served.

B. Unbalanced Bids. The Agency will decide whether any bid prices are unbalanced above or below a reasonable cost analysis value as determined by its Chief Engineer of the Highway Division. Bids in which

bid prices are unbalanced, mathematically and/or materially, may be rejected at the sole discretion of the Agency. For purposes of this subsection “mathematically unbalanced bid” and “materially unbalanced bid” shall have the same meaning as in 23 CFR Part 635 – Construction and Maintenance.

C. Rejection of Apparent Low Bid. The Agency may choose to reject the apparent low bid after the bid analysis is conducted. If this should occur, the Agency will send notification to the apparent low bidder via email. The apparent low bidder may submit a written appeal of the Agency’s decision.

D. Rejection of All Bids. The Agency may choose to reject all bids after the bid analysis is conducted. If this should occur, the Agency will send notification to all bidders via email.

7 APPEALS

Appeal Process. Any Bidder may submit a written appeal of an Agency decision. Written appeals must be received via email by Contract Administration and the Secretary of Transportation within seven (7) calendar days following bid opening or the rejection of the apparent low bid for the contract in question.

The written appeal shall outline the nature of the grievance and include appropriate documentation supporting the bidder's position.

The Secretary will endeavor to render a decision on the appeal within twenty-one (21) calendar days of the bid opening. The Secretary may appoint a hearing officer to hear an appeal.

Appeals are independent from, and shall neither affect nor stay, the award process of any contract. An award shall remain in effect unless and until it is overturned on appeal.

8 BID WITHDRAWAL OR REVISION

Bidders may withdraw their bid if they do not want to be considered. Bidders may choose to revise their submitted bid as many times as desired prior to the time set for the opening of proposals specified in the Invitation for Bids. To revise a bid, a bidder must withdraw their previously submitted bid. After revisions are complete, the bidder must resubmit their bid. Once the time set for the opening of bids has passed, a bid cannot be withdrawn or revised.

It should be noted, that in the event of an addendum, bids automatically are withdrawn by the bidding software. The Unacknowledged Addendum will be shown on the Contract Status table on the Dashboard after logging into iCXWeb. Bidders must acknowledge the addendum in the bidding software by clicking on Addenda on the Bidding tab, viewing the addendum and then selecting the Acknowledged Checkbox. After the addendum is acknowledged, the bid may be resubmitted.

9 AWARD OF CONTRACT

A. General. If a contract is to be awarded, the award will be made to the lowest responsible bidder that has submitted a Bid that complies with all the provisions required to render it formal.

B. Award Letter. An award letter will be sent to the successful bidder within 31 calendar days of bid opening via email notification indicating that their bid has been accepted.

C. Intent to Award Letter. For aviation contracts, an intent to award letter will be sent to the successful bidder within 31 calendar days of bid opening via email notification indicating that their bid has been accepted contingent upon grant funding approval. Once grant approval has been obtained, an award letter will be sent to the successful bidder via email notification. Grant funding determination is outlined in the Special Provisions.

D. Cancellation of Award Prior to Signing of Contract. The Agency may cancel the award of a contract prior to the signing thereof by all parties; the Agency shall not be liable therefore for any reason.

10 AUTHORITY TO CONTRACT

Prior to signing a Contract with the Agency, a Contractor shall take all steps necessary for it to enter into contracts with the State of Vermont including the following:

A. Business Registration: The Contractor awarded the Contract shall, upon notification of award, apply for registration with the Vermont Secretary of State's Office in order to do business in the State of Vermont, if not already so registered. AOT will not process the contract until the Contractor is registered with the Secretary of State’s office and is in good standing. The registration form may be obtained from the Vermont Secretary of State: 128 State Street, Montpelier VT 05609-1101. The

telephone number is 800-439-8683. Registration can be completed online at: https://bizfilings.vermont.gov/homepage.

B. Debarment: The Contractor also certifies under the penalties of perjury under the laws of the State of Vermont and the United States that, except as noted below, it is not currently, and has not been within the past three (3) years, suspended, debarred, voluntarily excluded or determined ineligible by any Federal or State Agency; does not have a proposed suspension, debarment, voluntary exclusion or ineligibility determination pending; and neither the Bidder nor any person associated with the Bidder in any capacity has been indicted, convicted, or had a civil judgment rendered against (it, him, her, them) by a court having jurisdiction in any matter involving fraud or official misconduct within the past three (3) years.

C. Non-Collusion: The Contractor awarded the Contract shall certify under the penalties of perjury under the laws of the State of Vermont and the United States that it has not, either directly or indirectly, entered into any agreement, participated in any collusion, or otherwise taken any action, in restraint of free competitive bidding in connection with the submitted bid for the Contract.

D. SAM: The Contractor awarded the Contract shall have an active registration and have an Unique Entity ID.

11 CONTRACTOR DOCUMENTS

After contract award, the selected Contractor shall submit requested documents within 10 working days from the Award date in iCXWeb by selecting Menu>Award & Contract>Award Tab. Prior to sending the award letter, the Agency will upload templates in the Request File column in the Award Tab for the standard requested documents.

The Contractor can view and download the documents to complete. Once completed, the Contractor shall upload each document in the appropriate placeholder in the Uploaded Documents column on the Award Tab. For non-templated standard documents, Contractors will upload their own documents in the appropriate placeholder in the Uploaded Documents column on the Award Tab.

Once all required forms have been uploaded and saved, the Agency will be automatically notified by the system software. The Agency will review for compliance and either accept or reject each document. If a document is rejected,

the Agency will include a note detailing what needs to be corrected. The note can be viewed by clicking on the ‘N’ icon which will be shaded blue on the entry line where the document was uploaded. Contractors may resubmit the document once corrections have been completed. The system will again automatically notify the Agency.

The following documents are considered standard documents that will be required for all contracts:

A. Corporate Resolution. The Corporate Resolution is a document that details who at the company has been authorized by vote by the Board of Directors to sign the Contract on behalf of the company. It should be on corporate letterhead and include the following:

1. Company Name

2. Company Address

3. Company Phone Number

4. Date in which the Board of Director’s voted to determine the authorized signers

5. Authorized Signers. This role must be identified by the Company’s Administrator role in iCXWeb.

6. The document shall include the exact phrases:

   a. That (Name, Title) of all authorized signers, of the (Company Name), on behalf of the company, is authorized to enter into a specific contract, lease, or other agreements, and further authorizing said officer to execute any documents which may be in his/her judgment to be desirable or necessary to effect the purpose of this vote.

   b. I HEREBY CERTIFY THAT SAID VOTE HAS NOT BEEN AMENDED OR REPEALED AND REMAINS IN FULL FORCE AND EFFECT AS OF THE (DATE SIGNED) AND THAT (NAME OF COMPANY PRESIDENT) IS THE DULY ELECTED PRESIDENT OF THIS COMPANY.

7. Attest by Corporate Secretary

8. Date signed by the Corporate Secretary

9. Corporate Seal

B. CA-94 – Schedule of Insurance Rates on Extra Work. This is a document that outlines insurance rates. This form can be completed by a company's insurance provider to provide the following information:

1. Worker's Compensation items by classification number and rate.

2. General Liability by classification number and rate.

3. Automobile Liability by classification number and rate.

4. Federal Social Security Act rate.

5. Federal Unemployment Insurance rate (Net).

6. Vermont Unemployment Compensation Act rate.

7. Sign and Date

C. Contract Bonds. A successful bidder entering into a contract for any portion of the work included in a proposal shall provide the Agency sufficient surety in the form of; 1) a Labor and Materials Bond, and 2) a Compliance Bond, both as required by 19 V.S.A. Section 10(8) and (9).

Each bond shall be in a sum equal to one-hundred percent (100%) of the contract awarded.

The CA-112 Compliance Bond shall guarantee the faithful performance and completion of the work to be done under the contract as well as compliance with all provisions of the contract.

The CA-113 Labor and Materials Bond shall guarantee the payment in full of all bills and accounts for material and labor used in the work as well as other obligations incurred in carrying out the terms of the contract.

The bonds shall be procured from an insurance company registered and licensed to do business in the State of Vermont.

Compliant bond forms will be provided by the Agency in the Contractor Submitted Documents.

The Power of Attorney document shall also be submitted with the bonds. There will be placeholders for each individual bond and power of attorney document to be uploaded. Only Page 1 of the Power of Attorney document should be uploaded.

D. Certificate of Insurance (COI). The appropriate insurance coverage type and minimum limits shall be compliant with Subsection 103.04 of the 2024 Standard Specifications for Construction book. The Contract name and number must be included in the Description of Operations section. The Certificate Holder will be State of Vermont Agency of Transportation. The Agency's address will be 219 North Main St. Barre, VT 05641. Only the COI should be uploaded. The individual policies should not be uploaded.

E. Vermont Certificate of Compliance. The form shall be reviewed and signed where appropriate.

F. Executive Order 02-22 Vendor Certification. The form shall be reviewed and signed where appropriate.

12 SIGNING OF CONTRACT

A. General. The Contract may be viewed in iCXWeb by clicking on Menu>Award & Contract>Contract Tab. A signing link to the Contract will be provided via email to the Company once all contractor requested documents have been accepted by the Agency. The Contract shall be signed by an Authorized Signer as identified in the Corporate Resolution. The Contract shall be signed within (3) working days of receipt. The Agency will sign the Contract after the Company Authorized Signer. Once signed the executed contract will be available to view and download from iCXWeb. No Contract shall be considered in effect until it has been fully signed by all of the parties.

13 CONSEQUENCES OF NON-COMPLIANCE IN CONTRACT AWARD PROCESS

A. General. Failure to comply with any of the requirements relative to signing the Contract or failure to furnish the required documents after notice of award shall be just cause for the annulment of the award or of the Contract and/or forfeiture of the bid bond. Further, if the award or the Contract is annulled or not awarded due to inaction of the lowest responsible bidder the bid bond accompanying the proposal shall become the property of the State.

B. Further Action by the Agency. If the award or the Contract is annulled, the Agency may award the Contract to the next lowest responsible bidder, re-advertise the Contract, or take other action as the Agency may decide is in its best interest.

If the Contract is awarded to the next lowest responsible bidder all requirements stated within shall apply.

C. Failure to Sign Contract Within Required Time. Failure by a Contractor to sign the contract within the required time specified, shall not be a reason for an extension of the completion date of the Contract.

DISADVANTAGED BUSINESS ENTERPRISE (DBE) POLICY
CONTRACT REQUIREMENTS

Disadvantaged Business Enterprise (DBE) Policy. It shall be the policy of the Vermont Agency of Transportation (VTrans) to ensure nondiscriminatory opportunity for Disadvantaged Business Enterprises (DBEs) to participate in the performance of all contracts and subcontracts financed with Federal funds as specified by the regulations of the United States Department of Transportation (USDOT) and as set forth below.

1. **Policy.** It is the policy of USDOT that DBEs as defined in 49 Code of Federal Regulation (CFR) Part 26 shall have the maximum opportunity to participate in the performance of contracts financed in whole or in part with Federal funds. Consequently, the DBE requirements of 49 CFR Part 26 and 23 CFR, Chapter 1, Part 230, Subpart b apply to this contract.

2. **DBE Obligation.** The State and its Contractors agree to ensure that DBEs as defined in 49 CFR Part 26, have the maximum opportunity to participate in the performance of contracts and subcontracts financed in whole or in part with Federal funds. **Each subcontract the prime contractor signs with a subcontractor must include this assurance:** *The contractor, sub recipient or subcontractor shall not discriminate on the basis of race, color, national origin, or sex in the award and performance of this contract. The contractor shall carry out applicable requirements of 49 CFR Part 26 in the award and administration of USDOT-assisted contracts. Failure by the contractor to carry out these requirements is a material breach of this contract, which may result in the termination of this contract or such other remedy, as VTrans deems appropriate.*

3. **Sanctions for Noncompliance.** The Contractor is hereby advised that failure of the Contractor, or any Subcontractor performing work under this contract, to carry out the requirements set forth in paragraphs 1 and 2 above shall constitute a breach of contract and after the notification of the Vermont Agency of Transportation, Secretary of Transportation, may result in termination of this contract by the State or such remedy as the State deems necessary.

4. **Inclusion in Subcontracts.** The Contractor shall insert in each of its subcontracts this Disadvantaged Business Enterprise (DBE) Policy and a clause requiring its subcontractors to include this same Policy in any lower tier subcontracts which they may enter into, together with a clause requiring the inclusion of the Policy in any further subcontract that may in turn be made. This Policy shall not be incorporated by reference.

Disadvantaged Business Enterprise (DBE) Program Goals. The Vermont Agency of Transportation (VTrans) is required to set an overall DBE goal for participation in all transportation related Federal-aid projects. The goal is determined following guidelines set forth in 49 CFR 26.45, and based on the availability of ready, willing and able DBEs who submitted bids and quotes for transportation related projects, compared as a percentage of all available contractors who submitted bids and quotes for transportation related projects during the same time period. The DBE goal may be adjusted to take into account other factors impacting DBE utilization, in an effort to narrowly tailor the overall DBE goal. The detailed goal setting methodology and current overall DBE goal may be viewed on the VTrans website at: http://vtrans.vermont.gov/civil-rights/doing-business/dbe-center/program-goals

The VTrans overall DBE goal is currently achieved by a combination of contract specific goals and a race/gender neutral policy. Contractors should be proactive and solicit bids and quotes from certified DBEs for use when submitting their own bids and employ certified DBEs when participating on transportation related projects.

Disadvantaged Business Enterprise (DBE) Definition. A DBE is defined as a business that is owned and controlled by one or more socially and economically disadvantaged person(s). For the purposes of this definition:

(1) "Socially and economically disadvantaged person" means an individual who is a citizen or lawful permanent resident of the United States and who is a Woman, Black, Hispanic, Portuguese, Native American, Asian American, or a member of another group, or an individual found to be disadvantaged by the Small Business Administration pursuant to Section 3 of the Small Business Act.

(2) "Owned and controlled" means a business which is:

a. A sole proprietorship legitimately owned and controlled by an individual who is a disadvantaged person.

b. A partnership, joint venture or limited liability company in which at least 51% of the beneficial ownership interests legitimately is held by a disadvantaged person(s).

c. A corporation or other entity in which at least 51% of the voting interest and 51% of the beneficial ownership interests legitimately are held by a disadvantaged person(s).

The disadvantaged group owner(s) or stockholder(s) must possess control over management, interest in capital, and interest in earnings commensurate with percentage of ownership. Disadvantaged participation in a joint venture must also be based on the sharing of real earnings, as above. If the disadvantaged group ownership interests are real, substantial and continuing and not created solely to meet the requirements of the program, a firm is considered a bona fide DBE.

Certified DBE Directory. The current Vermont Unified Disadvantaged Business Enterprise (DBE) Directory is available online at: http://vtrans.vermont.gov/civil-rights/doing-business/dbe-center/directory. This directory contains all currently certified DBEs available for work in Vermont and is updated continuously. Only firms listed in this directory are eligible for DBE credit on Vermont Federal-aid projects. If you have questions about DBE certification, or do not have access to the Internet, please call the AOT DBE Program Manager for assistance.

Counting DBE Participation Towards Project Goals. For payments made to DBE contractors to be counted toward DBE goals, the DBE contractors must perform a commercially useful function (CUF). The DBE must be responsible for execution of the work of the contract and must carry out its responsibilities by performing, managing, and supervising the work involved, consistent with standard industry practices.

This means that:

- The DBE must also be responsible for ordering its own materials and supplies, determining quantity and quality, negotiating price, installing (where applicable) and paying for the material itself;

- The DBE must perform work commensurate with the amount of its contract;

- The DBE's contribution cannot be that of an extra participant or a conduit through which funds are passed in order to obtain the appearance of DBE participation.

- The DBE must exercise responsibility for at least fifty percent of the total cost of its contract with its own workforce.

- None of the DBE's work can be subcontracted back to the prime contractor, nor can the DBE employ the prime's or other subcontractor's supervisors currently working on the project;
- The DBE's labor force must be separate and apart from that of the prime contractor or other subcontractors on the project. Transferring crews between primes, subcontractors, and DBE contractors is not acceptable.

- The DBE owner must hold necessary professional or craft license(s) or certification(s) for the type of work he/she performs on the project.

- The DBE may rent or lease, at competitive rates, equipment needed on the project from customary leasing sources or from other subcontractors on the project.

Allowable credit for payments made to DBEs for work performed. A contractor may take credit for payments made to a certified DBE that satisfies CUF requirements at the following rate:

- A DBE Prime Contractor: Count 100% of the value of the work performed by own forces, equipment and materials towards the DBE goals.

- An approved DBE subcontractor: Count 100% of the value of work performed by the DBE's own forces, equipment and materials, excluding the following:

    - The cost of materials/supplies purchased from a non-DBE Prime Contractor.

    - The value of work provided by non-DBE lower tier subcontractors, including non-DBE trucking to deliver asphalt to a DBE contractor.

- A DBE owner-operator of construction equipment: Count 100% of expenditures committed.

- A DBE manufacturer: Count 100% of expenditures committed. The manufacturer must be a firm that operates or maintains a factory or establishment that produces on the premises the materials or supplies obtained by the Contractor.

- A regular DBE dealer/supplier: Count 60% of expenditures committed. A regular dealer/supplier is defined as a firm that owns, operates, or maintains a store, warehouse or other establishment, in which the materials or supplies required for the performance of the contract are bought, kept in stock, and regularly sold or leased to the public in the usual course of business. A person may be a dealer in such bulk items as petroleum products, steel, cement, gravel, stone or asphalt without owning, operating or maintaining a place of business, if the person both owns and operates distribution equipment for the products, by means of a long-term agreement, and not by a contract by contract basis.

- A DBE broker: Count for DBE credit only the fees or commissions charged for assistance in the procurement, and fees and transportation charges for the delivery of materials or supplies required at the job site, but not the cost of materials procured. A broker is defined as any person(s) or firm who arranges or expedites transactions for materials or supplies and does not take physical possession of the materials or supplies at their place of business for resale.

- A DBE renter of construction equipment to a contractor: Count 20% of expenditures committed, with or without operator.

- A bona fide DBE service provider: Count 100% of reasonable fees or commissions. Eligible services include professional, technical, consultant, or managerial, services and assistance in the procurement of essential personnel, facilities, equipment, materials or supplies required for the performance of the contract. Eligible services also include agencies providing bonding and insurance specifically required for the performance of the contract.

- A trucking, hauling or delivery operation: Count 100% of expenditures committed when trucks are owned, operated, licensed and insured by the DBE and used on the contract and, if applicable, includes the cost of the materials and supplies. 100% of expenditures committed when the DBE leases trucks from another DBE firm including an owner-operator. 100% of reasonable fees, or commissions, the DBE receives as a result of a lease arrangement for trucks from a non-DBE, including an owner-operator.

- Any combination of the above.

Removal of Approved DBE From Transportation Related Project. Contractors may not terminate for convenience, any approved DBE subcontractor and perform the work with their own forces, without prior written consent from the AOT DBE Program Manager or the AOT Civil Rights Director

Federal-aid projects which specify a DBE contract goal. The provisions of the Vermont Agency of Transportation Supplemental Specification – Disadvantaged Business Enterprise (DBE) Utilization (CR 160) shall apply to all VTrans Federal-aid projects which specify a DBE contract goal.

Subcontractor Payments. In accordance with VTrans Standard Specifications for Construction, Section 107.01(h), on all federal-aid and state funded contracts, the Contractor, during the life of the Contract and on a monthly basis, shall submit a listing of payments to subcontractors using the tool specified in the Civil Rights Compliance Requirement document located in the working drawer in Doc Express. Reports are due to the Agency Office of Civil Rights by the tenth working day after month-end. There shall be no direct compensation allowed the Contractor for this work, but the cost thereof shall be included in the general cost of the work. In accordance with 9 V.S.A. Section 4003, notwithstanding any contrary agreement, payments made to subcontractors after seven days from receipt of a corresponding progress payment by the State to the Contractor, or seven days after receipt of a subcontractor's invoice, whichever is later, violate this agreement. Violations shall be reported to the Agency Office of Civil Rights for review. Failure to resolve disputes in a timely manner may result in a complaint made to the Agency Pre-qualification Committee. In this Committee's judgment, appropriate penalties may be involved for failure to comply with this specification. Penalties may include suspension, reduction or revocation of the Contractor's pre-qualification rating. This clause shall be included in the prime Contractor's Contract made with all if its subcontractors.

Attachment C: Standard State Provisions for Contracts and Grants

Revised: February 13, 2026

1. **Definitions:** For purposes of this Attachment, “Party” shall mean the Contractor, Grantee, or Subrecipient, with whom the State of Vermont is executing this Agreement and consistent with the form of the Agreement. “Agreement” shall mean the specific contract or grant to which this form is attached.
2. **Entire Agreement:** This Agreement, whether in the form of a contract, State-funded grant, or Federally-funded grant, represents the entire agreement between the parties on the subject matter. All prior agreements, representations, statements, negotiations, and understandings shall have no effect. Where an authorized individual is either required to click-through or otherwise accept, or made subject to, any electronic terms and conditions to use or access any product or service provided hereunder, such terms and conditions are not binding and shall have no force or effect. Further, any terms and conditions of Party’s invoice, acknowledgment, confirmation, or similar document, shall not apply, and any such terms and conditions on any such document are objected to without need of further notice or objection.
3. **Governing Law, Jurisdiction and Venue; No Waiver of Jury Trial:** This Agreement will be governed by the laws of the State of Vermont without resort to conflict of laws principles. Any action or proceeding brought by either the State or the Party in connection with this Agreement shall be brought and enforced in the Superior Court of the State of Vermont, Civil Division, Washington Unit. The Party irrevocably submits to the jurisdiction of this court for any action or proceeding regarding this Agreement. The Party agrees that it must first exhaust any applicable administrative remedies with respect to any cause of action that it may have against the State regarding its performance under this Agreement. Party agrees that the State shall not be required to submit to binding arbitration or waive its right to a jury trial.
4. **Sovereign Immunity:** The State reserves all immunities, defenses, rights, or actions arising out of the State’s sovereign status or under the Eleventh Amendment to the United States Constitution. No waiver of the State’s immunities, defenses, rights, or actions shall be implied or otherwise deemed to exist by reason of the State’s entry into this Agreement.
5. **No Employee Benefits For Party:** The Party understands that the State will not provide any individual retirement benefits, group life insurance, group health and dental insurance, vacation or sick leave, workers compensation or other benefits or services available to State employees, nor will the State withhold any state or Federal taxes except as required under applicable tax laws, which shall be determined in advance of execution of the Agreement. The Party understands

that all tax returns required by the Internal Revenue Code and the State of Vermont, including but not limited to income, withholding, sales and use, and rooms and meals, must be filed by the Party, and information as to Agreement income will be provided by the State of Vermont to the Internal Revenue Service and the Vermont Department of Taxes.

6. **Independence:** The Party will act in an independent capacity and not as officers or employees of the State.
7. **Defense and Indemnity:**
   A. The Party shall defend the State and its officers and employees against all third-party claims or suits arising in whole or in part from any act or omission of the Party or of any agent of the Party in connection with the performance of this Agreement. The State shall notify the Party in the event of any such claim or suit, and the Party shall immediately retain counsel and otherwise provide a complete defense against the entire claim or suit. The State retains the right to participate at its own expense in the defense of any claim. The State shall have the right to approve all proposed settlements of such claims or suits.
   B. After a final judgment or settlement, the Party may request recoupment of specific defense costs and may file suit in Washington Superior Court requesting recoupment. The Party shall be entitled to recoup costs only upon a showing that such costs were entirely unrelated to the defense of any claim arising from an act or omission of the Party in connection with the performance of this Agreement.
   C. The Party shall indemnify the State and its officers and employees if the State, its officers, or employees become legally obligated to pay any damages or losses arising from any act or omission of the Party or an agent of the Party in connection with the performance of this Agreement.
   D. Notwithstanding any contrary language anywhere, in no event shall the terms of this Agreement or any document furnished by the Party in connection with its performance under this Agreement obligate the State to (1) defend or indemnify the Party or any third party, or (2) otherwise be liable for the expenses or reimbursement, including attorneys' fees, collection costs or other costs of the Party or any third party.
8. **Insurance:** During the term of this Agreement, Party, at its expense, shall maintain in full force and effect the insurance coverages set forth in the Vermont State Insurance Specification in effect at the time of incorporation of this Attachment C into this Agreement. The terms of the Vermont State Insurance Specification are hereby incorporated by reference into this Attachment C as if fully set forth herein. A copy of the Vermont State Insurance Specification is available at: https://aoa.vermont.gov/Risk-Claims-COI.
9. **Reliance by the State on Representations:** All payments by the State under this Agreement will be made in reliance upon the accuracy of all representations

made by the Party in accordance with this Agreement, including but not limited to bills, invoices, progress reports, and other proofs of work.

10. **False Claims Act:** Any liability to the State under the Vermont False Claims Act (32 V.S.A. § 630 et seq.) shall not be limited notwithstanding any agreement of the State to otherwise limit Party's liability.

11. **Whistleblower Protections:** The Party shall not discriminate or retaliate against one of its employees or agents for disclosing information concerning a violation of law, fraud, waste, abuse of authority, or acts threatening health or safety, including but not limited to allegations concerning the False Claims Act. Further, the Party shall not require such employees or agents to forego monetary awards as a result of such disclosures, nor should they be required to report misconduct to the Party or its agents prior to reporting to any governmental entity and/or the public.

12. **Use and Protection of State Information:**

    A. As between the State and Party, "State Data" includes all data received, obtained, or generated by the Party in connection with performance under this Agreement. Party acknowledges that certain State Data to which the Party may have access may contain information that is deemed confidential by the State, or which is otherwise confidential by law, rule, or practice, or otherwise exempt from disclosure under the State of Vermont Access to Public Records Act, 1 V.S.A. § 315 et seq. ("Confidential State Data").

    B. With respect to State Data, Party shall:

        i. take reasonable precautions for its protection;

        ii. not rent, sell, publish, share, or otherwise appropriate it; and

        iii. upon termination of this Agreement for any reason, Party shall dispose of or retain State Data if and to the extent required by this Agreement, law, or regulation, or otherwise requested in writing by the State.

    C. With respect to Confidential State Data, Party shall:

        i. strictly maintain its confidentiality;

        ii. not collect, access, use, or disclose it except as necessary to provide services to the State under this Agreement;

        iii. provide at a minimum the same care to avoid disclosure or unauthorized use as it provides to protect its own similar confidential and proprietary information;

        iv. implement and maintain administrative, technical, and physical safeguards and controls to protect against any anticipated threats or hazards or unauthorized access or use;

        v. promptly notify the State of any request or demand by any court, governmental agency or other person asserting a demand or

request for Confidential State Data so that the State may seek an appropriate protective order; and

vi. upon termination of this Agreement for any reason, and except as necessary to comply with subsection B.iii above in this section, return or destroy all Confidential State Data remaining in its possession or control.

D. If Party is provided or accesses, creates, collects, processes, receives, stores, or transmits Confidential State Data in any electronic form or media, Party shall utilize:

i. industry-standard firewall protection;

ii. multi-factor authentication controls;

iii. encryption of electronic Confidential State Data while in transit and at rest;

iv. measures to ensure that the State Data shall not be altered without the prior written consent of the State;

v. measures to protect against destruction, loss, or damage of State Data due to potential environmental hazards, such as fire and water damage;

vi. training to implement the information security measures; and

vii. monitoring of the security of any portions of the Party's systems that are used in the provision of the services against intrusion.

E. No Confidential State Data received, obtained, or generated by the Party in connection with performance under this Agreement shall be processed, transmitted, stored, or transferred by any means outside the United States, except with the express written permission of the State.

F. Party shall notify the State within twenty-four hours after becoming aware of any unauthorized destruction, loss, alteration, disclosure of, or access to, any State Data.

G. State of Vermont Cybersecurity Standard Update: Party confirms that all products and services provided to or for the use of the State under this Agreement shall be in compliance with State of Vermont Cybersecurity Standard Update in effect at the time of incorporation of this Attachment C into this Agreement. The State of Vermont Cybersecurity Standard Update prohibits the use of certain branded products in State information systems or any vendor system, and a copy is available at: https://digitalservices.vermont.gov/cybersecurity/cybersecurity-standards-and-directives.

H. In addition to the requirements of this Section 12, Party shall comply with any additional requirements regarding the protection of data that may be included in this Agreement or required by law or regulation.

13. **Records Available for Audit:** The Party shall maintain all records pertaining to performance under this Agreement. “Records” means any written or recorded information, regardless of physical form or characteristics, which is produced or acquired by the Party in the performance of this Agreement. Records produced or acquired in a machine-readable electronic format shall be maintained in that format. The records described shall be made available at reasonable times during the period of this Agreement and for three years thereafter or for any period required by law for inspection by any authorized representatives of the State or Federal Government. If any litigation, claim, or audit is started before the expiration of the three-year period, the records shall be retained until all litigation, claims, or audit findings involving the records have been resolved.

14. **Nondiscrimination:**

    A. **Fair Employment Practices and Americans with Disabilities Act:** Party agrees to comply with the requirement of 21 V.S.A. Chapter 5, Subchapter 6, relating to fair employment practices, to the full extent applicable, and shall include this provision in all subcontracts for work performed in Vermont. Party shall also ensure, to the full extent required by the Americans with Disabilities Act of 1990, as amended, that qualified individuals with disabilities receive equitable access to the services, programs, and activities provided by the Party under this Agreement.

    B. **IT Accessibility Standards:** Party acknowledges and agrees that any digital products, services, and content provided under this Agreement, whether supporting State programs or intended for the State's use, must adhere to the State's accessibility standards and guidelines as established by Section 504 of the Rehabilitation Act of 1973 and Title II of the Americans with Disabilities Act of 1990 (28 CFR Part 35) (hereinafter, for purposes of this subsection B, the “Rule”). The Rule requires communication and content on web platforms and mobile applications to meet or exceed specific success criteria and conformance requirements. The Rule applies to websites, software applications, electronic reports and output documentation, and training delivered in electronic formats (including, but not limited to, documents, videos, and webinars), and other digital content. Information concerning the Rule and the State’s Universal Digital Accessibility resources are available on the State’s Communications and Marketing Office website at: https://cmo.vermont.gov.

        i. Party warrants that the software, products, services, or subscriptions provided under this Agreement, whether supporting State programs or intended for the State's use (hereinafter, for purposes of this subsection B, “Products”) comply with the Rule and agrees to defend, indemnify, and hold harmless the State against any claims related to a Product’s non-compliance with the Rule.

        ii. When updates or upgrades are made to the Products available through this Agreement, the Party agrees:

a) to develop functionality that supports accessibility in conformance with the Rule and, if any issues arise due to nonconformance with the Rule, to provide alternative solutions upon request at no additional cost to the State; and

b) to document how the changes will impact or improve the Product's accessibility and usability. This documentation, upon request, must be provided to the State in advance of the update or upgrade, occurring within an agreed timeframe sufficient for the State to review the changes and either approve them or request a remediation plan from the Party.

iii. If agreed-upon updates fail to improve the Product's accessibility or usability as planned, such failure shall be a material breach of this Agreement.

15. Offset: The State may offset any sums which the Party owes the State against any sums due the Party under this Agreement; provided, however, that any offset of amounts due the State of Vermont as taxes shall be in accordance with the procedures more specifically provided in 32 V.S.A. § 3113.

16. Taxes Due to the State: Party certifies under the pains and penalties of perjury that, as of the date this Agreement is signed, the Party is in good standing with respect to, or in full compliance with, a plan to pay any and all taxes due the State of Vermont.

17. Taxation of Purchases: All State purchases must be invoiced tax free. An exemption certificate will be furnished upon request with respect to otherwise taxable items.

18. Child Support: (Only applicable if the Party is a natural person, not a corporation or partnership.) Party states that, as of the date this Agreement is signed, Party is not under an obligation to pay child support or is in good standing with respect to or in full compliance with a plan to pay any and all child support payable under a support order. Party makes this statement with regard to support owed to any and all children residing in Vermont. In addition, if the Party is a resident of Vermont, Party makes this statement with regard to support owed to any and all children residing in any other state or territory of the United States.

19. Sub-Agreements: Party shall not assign, subcontract, or subgrant the performance of this Agreement or any portion thereof to any other Party without the prior written approval of the State. Party shall be responsible and liable to the State for all acts or omissions of subcontractors and any other person performing work under this Agreement pursuant to an agreement with Party or any subcontractor.

In the case this Agreement is a contract with a total cost in excess of $250,000, the Party shall provide to the State a list of all proposed subcontractors and subcontractors' subcontractors, together with the identity of those subcontractors' workers compensation insurance providers, and additional required or requested information, as applicable, in accordance with Section 32 of The Vermont

Recovery and Reinvestment Act of 2009 (Act No. 54), as amended by Section 17 of Act No. 142 (2010) and by Section 6 of Act No. 50 (2011).

Party shall include the following provisions of this Attachment C in all subcontracts for work performed solely for the State of Vermont and subcontracts for work performed in the State of Vermont: Section 10 ("False Claims Act"); Section 11 ("Whistleblower Protections"); Section 12 ("Confidentiality and Protection of State Information"); Section 14 ("Fair Employment Practices and Americans with Disabilities Act"); Section 16 ("Taxes Due the State"); Section 18 ("Child Support"); Section 20 ("No Gifts or Gratuities"); Section 22 ("Certification Regarding Debarment"); Section 30 ("State Facilities"); and Section 32.A ("Certification Regarding Use of State Funds").

20. **No Gifts or Gratuities:** Party shall not give title or possession of anything of substantial value (including property, currency, travel, and/or education programs) to any officer or employee of the State during the term of this Agreement.

21. **Regulation of Hydrofluorocarbons:** Party confirms that all products provided to or for the use of the State under this Agreement shall not contain hydrofluorocarbons, as prohibited under 10 V.S.A. § 586.

22. **Certification Regarding Debarment:** Party certifies under pains and penalties of perjury that, as of the date that this Agreement is signed, neither Party nor Party's principals (officers, directors, owners, or partners) are presently debarred, suspended, proposed for debarment, declared ineligible, or excluded from participation in Federal programs, or programs supported in whole or in part by Federal funds. Party further certifies under pains and penalties of perjury that, as of the date that this Agreement is signed, Party is not presently debarred, suspended, nor named on the State's Debarment List at: https://bgs.vermont.gov/purchasing-contracting/debarment.

23. **Conflict of Interest:**

    A. **Organizational Conflict of Interest (OCOI):** An OCOI arises when the Party as a business entity has an interest (for example, customers, partners, contracts) that could undermine, or reasonably be perceived to undermine, its faithful and unbiased performance of this Agreement.

    B. **Personal Conflict of Interest (PCOI):** A PCOI arises when an interest held by an agent or employee of the Party could undermine, or reasonably be perceived to undermine, the faithful and unbiased performance of this Agreement.

    C. **Requirements:** Party shall not have PCOIs or OCOI's with respect to this Agreement nor with respect to any other agreement(s) it may hold with the State. To ensure that PCOIs and OCOIs do not exist, the Party shall:

        i. Conduct an internal review of its current affiliations and activities and employees and agents and identify actual, potential, or reasonably perceived PCOIs or OCOIs relative to this Agreement.

ii. Maintain effective oversight to verify compliance with PCOI and OCOI prohibitions.

iii. Prevent PCOIs, including not assigning or allowing an employee to perform any role or task under this Agreement for which the Party has identified a PCOI.

iv. Inform employees and agents of their obligation to disclose PCOIs and to comply with the confidentiality provisions and any non-disclosure agreement required by this Agreement.

v. Make an immediate and full disclosure, in writing, to the State point of contact for this Agreement of any actual or potential PCOI or OCOI or the existence of any facts that may cause a reasonably prudent person to perceive a PCOI or OCOI with respect to this Agreement.

D. **Remedies:**

i. In the event the State determines that a PCOI or OCOI exists, the State will discuss the matter with the Party to determine whether the PCOI or OCOI can be mitigated to the State's satisfaction.

ii. If the State does not deem mitigation practicable, the State may terminate all or a portion of this Agreement for default or pursue such other remedies as may be permitted by law or this Agreement.

iii. If Party fails to disclose facts pertaining to the existence of a potential or actual PCOI or misrepresents relevant information to the State, the State may terminate this Agreement for default or pursue such other remedies as may be permitted by law or this Agreement.

24. **Vermont Public Records Act:** Party acknowledges and agrees that this Agreement, any and all information obtained by the State from the Party in connection with this Agreement, and any obligations of the State to maintain the confidentiality of information are subject to the State of Vermont Access to Public Records Act, 1 V.S.A. § 315 et seq.

25. **Force Majeure:** Neither the State nor the Party shall be liable to the other for any failure or delay of performance of any obligations under this Agreement to the extent such failure or delay shall have been wholly or principally caused by acts or events beyond its reasonable control rendering performance illegal or impossible (excluding strikes or lockouts) ("Force Majeure"). Where Force Majeure is asserted, the nonperforming party must prove that it made all reasonable efforts to remove, eliminate or minimize such cause of delay or damages, diligently pursued performance of its obligations under this Agreement, substantially fulfilled all non-excused obligations, and timely notified the other party of the likelihood or actual occurrence of an event described in this paragraph.

26. **Marketing:** Party shall not use the State's logo or otherwise refer to the State in any publicity materials, information pamphlets, press releases, research reports,

advertising, sales promotions, trade shows, or marketing materials or similar communications to third parties except with the prior written consent of the State.

27. **Termination:**

    A. **Non-Appropriation:** If this Agreement extends into more than one fiscal year of the State (July 1 to June 30), and if appropriations are insufficient to support this Agreement, the State may cancel this Agreement at the end of the fiscal year, or otherwise upon the expiration of existing appropriation authority. In the case that this Agreement is funded in whole or in part by Federal funds, and in the event Federal funds become unavailable or reduced, the State may suspend or cancel this Agreement immediately, and the State shall have no obligation to pay Party from State revenues.

    B. **Termination for Cause:** Either party may terminate this Agreement if a party materially breaches its obligations under this Agreement, and such breach is not cured within thirty (30) days after delivery of the non-breaching party's notice or such longer time as the non-breaching party may specify in the notice.

    C. **Termination Assistance:** Upon nearing the end of the final term or termination of this Agreement, without respect to cause, the Party shall take all reasonable and prudent measures to facilitate any transition required by the State. All State property, tangible and intangible, shall be returned to the State upon demand at no additional cost to the State in a format acceptable to the State.

28. **Continuity of Performance:** In the event of a dispute between the Party and the State, each party will continue to perform its obligations under this Agreement during the resolution of the dispute until this Agreement is terminated in accordance with its terms.

29. **No Implied Waiver of Remedies:** Either party's delay or failure to exercise any right, power, or remedy under this Agreement shall not impair any such right, power, or remedy, or be construed as a waiver of any such right, power, or remedy. All waivers must be in writing.

30. **State Facilities:** If the State makes space available to the Party in any State facility during the term of this Agreement for purposes of the Party's performance under this Agreement, the Party shall only use the space in accordance with all policies and procedures governing access to, and use of, State facilities, which shall be made available upon request. State facilities will be made available to Party on an "AS IS, WHERE IS" basis, with no warranties whatsoever.

31. **Requirements Pertaining Only to Federal Grants and Subrecipient Agreements:** If this Agreement is a grant that is funded in whole or in part by Federal funds:

    A. **Requirement to Have a Single Audit:** The Subrecipient will complete the Subrecipient Annual Report annually within 45 days after its fiscal year end, informing the State of Vermont whether or not a Single Audit is required for

the prior fiscal year. If a Single Audit is required, the Subrecipient will submit a copy of the audit report to the Federal Audit Clearinghouse within nine months. If a single audit is not required, only the Subrecipient Annual Report is required. A Single Audit is required if the subrecipient expends $1,000,000 or more in Federal assistance during its fiscal year and must be conducted in accordance with 2 CFR Chapter I, Chapter II, Part 200, Subpart F. The Subrecipient Annual Report is required to be submitted within 45 days, whether or not a Single Audit is required.

B. **Internal Controls:** In accordance with 2 CFR Part II, §200.303, the Party must establish and maintain effective internal control over the Federal award to provide reasonable assurance that the Party is managing the Federal award in compliance with Federal statutes, regulations, and the terms and conditions of the award. These internal controls should be in compliance with guidance in "Standards for Internal Control in the Federal Government" issued by the Comptroller General of the United States and the "Internal Control Integrated Framework" issued by the Committee of Sponsoring Organizations of the Treadway Commission.

C. **Mandatory Disclosures:** In accordance with 2 CFR Part II, §200.113, Party must disclose, in a timely manner, in writing to the State, all violations of Federal criminal law involving fraud, bribery, or gratuity violations potentially affecting the Federal award. Failure to make required disclosures may result in the imposition of sanctions which may include disallowance of costs incurred, withholding of payments, termination of the Agreement, suspension/debarment, etc.

32. Requirements Pertaining Only to State-Funded Grants:

A. **Certification Regarding Use of State Funds:** If Party is an employer and this Agreement is a State-funded grant in excess of $1,000, Party certifies that none of these State funds will be used to interfere with or restrain the exercise of Party's employee's rights with respect to unionization.

B. **Good Standing Certification (Act 154 of 2016):** If this Agreement is a State-funded grant, Party hereby represents: (i) that it has signed and provided to the State the form prescribed by the Secretary of Administration for purposes of certifying that it is in good standing (as provided in Section 13(a)(2) of Act 154) with the Agency of Natural Resources and the Agency of Agriculture, Food and Markets, or otherwise explaining the circumstances surrounding the inability to so certify; and (ii) that it will comply with the requirements stated therein.

(End of Standard State Provisions)

USDOT Standard Title VI Nondiscrimination Assurances Appendix A, E

Assurance Appendix A

During the performance of this contract, the contractor, for itself, its assignees, and successors in interest (hereinafter referred to as the "contractor") agrees as follows:

1. **Compliance with Regulations:** The contractor (hereinafter includes consultants) will comply with the Acts and the Regulations relative to Nondiscrimination in Federally-assisted programs of the U.S. Department of Transportation, Federal Highway Administration (FHWA), as they may be amended from time to time, which are herein incorporated by reference and made a part of this contract.

2. **Nondiscrimination:** The contractor, with regard to the work performed by it during the contract, will not discriminate on the grounds of race, color, national origin, sex, age, disability, income-level, or LEP in the selection and retention of subcontractors, including procurements of materials and leases of equipment. The contractor will not participate directly or indirectly in the discrimination prohibited by the Acts and the Regulations as set forth in Appendix E, including employment practices when the contract covers any activity, project, or program set forth in Appendix B of 49 CFR Part 21.

3. **Solicitations for Subcontracts, Including Procurements of Materials and Equipment:** In all solicitations, either by competitive bidding, or negotiation made by the contractor for work to be performed under a subcontract, including procurements of materials, or leases of equipment, each potential subcontractor or supplier will be notified by the contractor of the contractor's obligations under this contract and the Acts and the Regulations relative to Non-discrimination on the grounds of race, color, national origin, sex, age, disability, income-level, or LEP.

4. **Information and Reports:** The contractor will provide all information and reports required by the Acts, the Regulations and directives issued pursuant thereto and will permit access to its books, records, accounts, other sources of information, and its facilities as may be determined by the Recipient or the FHWA to be pertinent to ascertain compliance with such Acts, Regulations, and instructions. Where any information required of a contractor is in the exclusive possession of another who fails or refuses to furnish the information, the contractor will so certify to the Recipient or the FHWA, as appropriate, and will set forth what efforts it has made to obtain the information.

5. **Sanctions for Noncompliance:** In the event of a contractor's noncompliance with the Non-discrimination provisions of this contract, the Recipient will impose such contract sanctions as it or the FHWA may determine to be appropriate, including, but not limited to:

    a. withholding payments to the contractor under the contract until the contractor complies; and/or
    b. cancelling, terminating, or suspending a contract, in whole or in part.

6. **Incorporation of Provisions:** The contractor will include the provisions of paragraphs one through six in every subcontract, including procurements of materials and leases of equipment, unless exempt by the Acts, the Regulations and directives issued pursuant thereto. The contractor will take action with respect to any subcontract or procurement

as the Recipient or the FHWA may direct as a means of enforcing such provisions including sanctions for noncompliance. Provided, that if the contractor becomes involved in, or is threatened with litigation by a subcontractor, or supplier because of such direction, the contractor may request the Recipient to enter into any litigation to protect the interests of the Recipient. In addition, the contractor may request the United States to enter into the litigation to protect the interests of the United States.

Assurance Appendix E

During the performance of this contract, the contractor, for itself, its assignees, and successors in interest (hereinafter referred to as the "contractor") agrees to comply with the following non-discrimination statutes and authorities; including but not limited to:

- Title VI of the Civil Rights Act of 1964 (42 U.S.C. § 2000d *et seq*., 78 stat. 252), (prohibits discrimination on the basis of race, color, national origin), as implemented by 49 C.F.R. § 21.1 et seq. and 49 C.F.R. § 303;

- The Uniform Relocation Assistance and Real Property Acquisition Policies Act of 1970, (42 U.S.C. § 4601), (prohibits unfair treatment of persons displaced or whose property has been acquired because of Federal or Federal-aid programs and projects);
- Federal-Aid Highway Act of 1973, (23 U.S.C. § 324 *et seq*.), (prohibits discrimination on the basis of sex);
- Section 504 of the Rehabilitation Act of 1973, (29 U.S.C. § 794 *et seq*.), as amended, (prohibits discrimination on the basis of disability); and 49 CFR Part 27;
- The Age Discrimination Act of 1975, as amended, (42 U.S.C. § 6101 *et seq*.), (prohibits discrimination on the basis of age);
- Airport and Airway Improvement Act of 1982, (49 USC § 471, Section 47123), as amended, (prohibits discrimination based on race, creed, color, national origin, or sex);
- The Civil Rights Restoration Act of 1987, (102 Stat. 28.), ("*….which restore[d] the broad scope of coverage and to clarify the application of title IX of the Education Amendments of 1972, section 504 of the Rehabilitation Act of 1973, the Age Discrimination Act of 1975, and title VI of the Civil Rights Act of 1964*.");
- Titles II and III of the Americans with Disabilities Act, which prohibit discrimination on the basis of disability in the operation of public entities, public and private transportation systems, places of public accommodation, and certain testing entities (42 U.S.C. §§ 12131 -- 12189) as implemented by Department of Justice regulations at 28 C.F.R. parts 35 and 36, and Department of Transportation regulations at 49 C.F.R. parts 37 and 38;
- The Federal Aviation Administration's Non-discrimination statute (49 U.S.C. § 47123) (prohibits discrimination on the basis of race, color, national origin, and sex);
- Executive Order 12898, Federal Actions to Address Environmental Justice in Minority Populations and Low-Income Populations, which ensures non-discrimination against minority populations by discouraging programs, policies, and activities with disproportionately high and adverse human health or environmental effects on minority and low-income populations;
- Executive Order 13166, Improving Access to Services for Persons with Limited English Proficiency, and resulting agency guidance, national origin discrimination includes discrimination because of limited English proficiency (LEP). To ensure compliance with Title VI, you must take reasonable steps to ensure that LEP persons have meaningful access to your programs (70 Fed. Reg. at 74087 to 74100);
- Title IX of the Education Amendments of 1972, as amended, which prohibits you from discriminating because of sex in education programs or activities (20 U.S.C. 1681 et seq), as implemented by 49 C.F.R. § 25.1 et seq.

CA-26

STANDARD FEDERAL EQUAL EMPLOYMENT OPPORTUNITY
CONSTRUCTION CONTRACT SPECIFICATIONS
(EXECUTIVE ORDER 11246)

1. As used in these specifications:

   a. "Covered Area" means the geographical area described in the solicitation from which this contract resulted.

   b. "Director" means Director, Office of Federal Contract Compliance Programs, United States Department of Labor, or any person to whom the Director delegates authority.

   c. "Employer Identification Number" means the Federal Social Security Number used on the Employer's Quarterly Federal Tax Return, U.S. Treasury Department Form 941.

   A Minority Group Member is:

   ...American Indian or Alaskan Native
   consisting of all persons having origins in any of the original people of North American and who maintain cultural identification through tribal affiliations or community recognition.

   ...Black
   consisting of all persons having origins in any of the Black racial groups of Africa.

   ...Asian or Pacific Islander
   consisting of all persons having origins in any of the original people of the Far East, Southeast Asia, the Indian Sub-Continent or the Pacific Islands. This area includes China, India, Japan, Korea, the Philippines and Samoa.

   ...Hispanic
   consisting of all persons of Mexican, Puerto Rican, Cuban, Central or South American or other Spanish culture or origin.

   ...Cape Verde an
   consisting of all persons having origins in the Cape Verde Islands.

   ...Portuguese
   consisting of all persons of Portuguese, Brazilian or other Portuguese culture or origin.

2. Whenever the Contractor, or any Subcontractor at any tier, subcontracts a portion of the work involving any construction trade, it shall physically include in each subcontract in excess of $10,000.00 the provisions of these specifications and the notice which contains the applicable goals for minority and female participation and which is set forth in the solicitations from which this contract resulted.

3. If the Contractor is participating (pursuant to 41 CFR 60-4.5) in the Hometown Plan approved by the U.S. Department of Labor in the covered area either individually or through an association, its affirmative action obligations on all work in the Plan area (including goals and timetables) shall be in accordance with that Plan for those trades which have unions participating in the Plan. Contractors must be able to demonstrate their participation in and compliance with the provisions of any such Hometown Plan. Each Contractor or subcontract participating in an approved Plan is individually required to comply with its obligations under the EEO clause, and to make a good faith effort to achieve each goal under the Plan in each trade in which it has employees. the overall good faith performance by other Contractors or subcontractors toward a goal in an approved Plan does not excuse any covered Contractor's or subcontractor's failure to make good faith efforts to achieve the Plan goals and timetables.

4. The Contractor shall implement the specific affirmative action standards provided in Paragraphs 7a through p of these specifications. The goals set for the Contractor in the solicitation from which this contract resulted are expressed as percentages in the total hours of employment and training of minority and female utilization the Contractor should reasonably be able to achieve in each construction trade in which it has employees in the covered area. The Contractor is expected to make substantially uniform progress toward its goals in each craft during the period specified.

5. Neither the provisions of any collective bargaining agreement nor the failure by a union with whom the Contractor has a collective bargaining agreement to refer either minority or women shall excuse the Contractor's obligations under these specifications, Executive Order 11246, or the regulations promulgated pursuant thereto.

6. In order for the non-working training hours of apprentices and trainees to be counted in meeting the goals, such apprentices and trainees must be employed by the Contractor during the training period, and the Contractor must have made a commitment to employ the apprentices and trainees at the completion of their training, subject to the availability of employment opportunities. Trainees must be trained pursuant to training programs approved by the U.S. Department of Labor.

7. The Contractor shall take specific affirmative actions to ensure equal employment opportunity . The evaluation of the Contractor's compliance with these specifications shall be based upon its effort to achieve maximum results from its actions. The Contractor shall document these efforts fully and shall implement affirmative action steps at least as extensive as the following:

   a. Ensure and maintain a working environment free of harassment, intimidation and coercion at all sites, and in all facilities at which the Contractor's employees are assigned to work. The Contractor, where possible, will assign two or more women to each construction project. The Contractor shall specifically ensure that all foremen, superintendents, and other on-site supervisory personnel are aware of and carry out the Contractor's obligation to maintain such a working environment with specific attention to minority or female individuals working at such sites or in such facilities.

   b. Establish and maintain a current list of minority and female recruitment sources, provide written notification to minority and female recruitment sources and to community organizations when the Contractor or its unions have employment opportunities available and maintain a record of the organizations' responses.

c. Maintain a current file of the names, addresses and telephone numbers of each minority and female off-the-street applicant and minority or female referral from a union, a recruitment source or community organization and of what action was taken with respect to each such individual. If such individual was sent to the union hiring hall for referral and was not referred back to the Contractor by the union or, if referred, not employed by the Contractor, this shall be documented in the file with the reason therefor, along with whatever additional actions the Contractor may have taken.

d. Provide immediate written notifications to the Regional Director when the union or unions, with which the Contractor has a collective bargaining agreement, have not referred to the Contractor a minority person or woman sent by the Contractor or when the Contractor has other information that the union referral process has impeded the Contractor's efforts to meet its obligations.

e. Develop on-the-job training opportunities and/or participate in training programs for the area which expressly include minorities and women, including upgrading programs and apprenticeship and trainee programs relevant to the Contractor's employment needs, especially those programs funded or approved by the Department of Labor. The Contractor shall provide notice of these programs to the sources compiled under Paragraph 7b above.

f. Disseminate the Contractor's EEO policy by providing notice of the policy to unions and training programs and requesting their cooperation in assisting the Contractor in meeting its EEO obligations; by including it in any policy manual and collective bargaining agreement; by publicizing it in the company newspaper, annual report, etc.; by specific review of the policy with all management personnel and with all minority and female employees at least once a year; and by posting the company EEO policy on bulletin boards accessible to all employees at each location where construction is performed.

g. Review, at least annually, the company's EEO policy and affirmative action obligations under these specifications with all employees having any responsibility for hiring, assignment, layoff, termination or other employment decisions including specific review of these items with on-site supervisory personnel such as Superintendents, Supervisors etc., prior to the initiation of construction work at any job site. A written record shall be made and maintained identifying the time and place of these meetings, persons attending, subject matter discussed, and disposition of the subject matter.

h. Disseminate the Contractor's EEO policy externally by including it in any advertising in the news media, and providing written notification to, and discussing the Contractor's EEO policy with, other Contractors and subcontractors with whom the Contractor anticipates doing business.

i. Direct its recruitment efforts, both oral and written, to minority, female and community organizations, to schools with minority and female students and to minority and female recruitment and training organizations serving the Contractor's recruitment area and employment needs. Not later than one month prior to the date for the acceptance of applications for apprenticeship or other training by any recruitment source, the Contractor shall send written notifications to organizations such as the above, describing the openings, screening procedures, and tests to be used in the selection process.

j. Encourage present minority and female employees to recruit other minority persons and women and, where reasonable, provide after school, summer and vacation employment to minority and female youth both on the site and in other areas of a Contractor's workforce.

k. Validate all tests and other selection requirements where there is an obligation to do so under 41 CFR Part 60-3.

l. Conduct, at least annually, an inventory and evaluation of all minority and female personnel for promotional opportunities and encourage these employees to seek or to prepare for, through appropriate training, etc., such opportunities.

m. Ensure that seniority practices, job classifications, work assignments and other personnel practices, do not have a discriminatory effect by continually monitoring all personnel and employment-related activities to ensure that the EEO policy and Contractor's obligations under these specifications are being carried out.

n. Ensure that all facilities and company activities are non-segregated except that separate or single-user toilet and necessary changing facilities shall be provided to assure privacy between the sexes.

o. Document and maintain a record of all solicitations of offers for subcontracts from minority and female construction contractors and suppliers, including circulation of solicitations to minority and female contractor associations and other business associations.

p. Conduct a review, at least annually, of all supervisors' adherence to and performance under the Contractor's EEO policies and affirmative action obligations.

8. Contractors are encouraged to participate in voluntary associations which assist in fulfilling one or more of their affirmative action obligations (Paragraph 7a through p). The efforts of a contractor association, joint contractor-union, contractor-community, or other similar group of which the Contractor is a member and participant, may be asserted as fulfilling any one or more of its obligations under Paragraph 7a through p of these Specifications provided that the Contractor actively participates in the group, makes every effort to assure that the group has a positive impact on the employment of minorities and women in the industry, reflected in the Contractor's minority and female workforce participation , makes a good faith effort to meet its individual goals and timetables, and can provide access to documentation which demonstrates the effectiveness of actions taken on behalf of the Contractor. The obligation to comply, however, is the Contractor's, and failure of such a group to fulfill an obligation shall not be a defense for the Contractor's non-compliance.

9. A single goal for minorities and a separate single goal for women have been established. The Contractor, however, is required to provide equal employment opportunity and to take affirmative action for all minority groups, both male and female, and all women, both minority and non-minority. Consequently, the Contractor may be in violation of the Executive Order if a particular group is employed in a substantially disparate manner (for example, even though the Contractor has achieved its goals for women generally, the Contractor may be in violation of the Executive Order if a specific minority group of women is under-utilized).

10. The Contractor shall not use the goals and timetables or affirmative action standards to discriminate against any person because of race, color, religion, sex or national origin.

11. The Contractor shall not enter into any subcontract with any person for firm debarred from Government contracts pursuant to Executive Order 11246.

12. The Contractor shall carry out such sanctions and penalties for violation of these specifications and of the Equal Opportunity Clause, including suspension, terminations and cancellation of existing subcontracts as may be imposed or ordered pursuant to Executive Order 11246, as amended, and its implementing regulations, by the Office of Federal Contract Compliance Programs. Any Contractor who fails to carry out such sanctions and penalties shall be in violation of these specifications and Executive Order 11246, as amended.

13. The Contractor, in fulfilling its obligations under these specifications, shall implement specific affirmative action steps, at least as extensive as those standards prescribed in Paragraph 7 of these specifications, so as to achieve maximum results from its efforts to ensure equal employment opportunity. If the Contractor fails to comply with the requirements of the Executive Order, the implementing regulations or these specifications, the Director shall proceed in accordance with 41 CFR 60-4.8.

14. The Contractor shall designate a responsible official to monitor all employment-related activity to ensure that the company EEO policy is being carried out, to submit reports relating to the provisions hereof as may be required by the Government and to keep records. Records shall at least include for each employee the name, address, telephone numbers, construction trade union affiliation if any, employee identification number when assigned, social security number, race, sex, status (e.g., mechanic, apprentice, trainee, helper or laborer), dates of changes in status, hours worked per week in the indicated trade, rate of pay, and locations at which the work was performed. Records shall be maintained in an easily understandable and retrievable form; however, to the degree that existing records satisfy this requirement, contractors shall not be required to maintain separate records.

15. Nothing herein provided shall be construed as a limitation upon the application of other laws which establish different standards of compliance or upon the application or requirements for the hiring of local or other area residents (e.g., those under the Public Works Employment Act of 1977 and the Community Development Block Grant Program).

NOTICE OF REQUIREMENTS FOR AFFIRMATIVE ACTION TO ENSURE EQUAL EMPLOYMENT OPPORTUNITY (EXECUTIVE ORDER 11246)

1. The Offeror's or Bidder's attention is called to the "Equal Opportunity Clause" and the "Standard Federal Equal Employment Specifications" set forth herein.

2. The goals and timetables for minority and female participation, expressed in percentage terms for the Contractor's aggregate workforce in each trade on all construction work in the covered area, are as follows:

Economic Areas	Timetables	Goals for Minority participation for each trade (%)	Goals for Female Participation in each trade (%)
Entire State of Vermont:			
Vermont 003 Burlington, VT Non-SMSA Counties NH Coos; NH Grafton: NH Sullivan; VT Addison; VT Caledonia; VT Chitten- den; VT Essex; VT Frank- lin; VT Grand Isle; VT Lamoille; VT Orange; VT Orleans; VT Rutland; VT Washington; VT Windsor	Indefinite	0.8	6.9
Connecticut (Mass) 006 Hartford - New Haven Springfield, CT-MA Non-SMSA Counties CT Litchfield; CT Windham; MA Franklin; NH Cheshire; VT Windham	Indefinite	5.9	
New York 007 Albany - Schnec- tady - Troy, NY Non-SMSA Counties NY Clinton; NY Columbia; NY Essex; NY Fulton; NY Greene; NY Hamilton; NY Sohoharie; NY Warren; NY Washington; VT Bennington	Indefinite	2.6	

These goals are applicable to all the Contractor's construction work (whether or not it is Federal or federally assisted) performed in the covered area. If the Contractor performs construction work in a geographical area located outside of the covered area, it shall apply the goals established for such geographical area where the work is actually performed. With regard to this second area, the Contractor also is subject to the goals for both its federally involved and non-federally involved construction.

The Contractor's compliance with the Executive Order and the regulation in CFR Part 60-4 shall be based on its implementation of the Equal Opportunity Clause, specific affirmative action obligations required by the specifications set forth in 41 CFR 60-4.3 (a), and its efforts to meet the goals. The hours of minority and female employment and training must be substantially uniform throughout the length of the contract and in each trade, and the Contractor shall make a good faith effort to employ minorities and women evenly on each of its projects. The transfer of minority or female employees or trainees from Contractor to Contractor or from project to project for the sole purpose of meeting the Contractor's goals shall be a violation of the contract, the Executive Order and the regulations in 41 CFR Part 60-4. Compliance with the goals will be measured against the total work hours performed.

3. The Contractor shall provide written notification to the Director of the Office of Federal Contract Compliance Programs within ten working days of award of any construction subcontract in excess of $10,000.00 at any tier for construction work under the contract resulting from this solicitation. The notifications shall list the name, address and telephone number of the subcontractor; employer identification number of the subcontractor; estimated dollar amount of the subcontract; and the geographical area in which the subcontract is to be performed.

4. As used in this Notice, and in the contract resulting from this solicitation, the "covered area" is (insert description of the geographical areas where the contract is to be performed giving the state, county and city, if any)

STATE OF VERMONT
AGENCY OF TRANSPORTATION

November, 1985
CA-109

CONTRACTOR'S EEO CERTIFICATION FORM

Certification with regard to the Performance of Previous Contracts of Subcontracts subject to the Equal Opportunity Clause and the filing of Required Reports.

The bidder ____, proposed subcontractor _____, hereby certifies that he/she has _____, has not _____, participated in a previous contract or subcontract subject to the equal opportunity clause, as required by Executive Orders 10925, 11114, or 11246 as amended, and that he/she has _____, has not _____, filed with the Joint Reporting Committee, the Director of the Office of Federal Contract Compliance, a Federal Government contracting or administering agency, or the President's Committee on Equal Employment Opportunity, all reports due under the applicable filing requirements.

_____	_____	_____
Company	By	Title

NOTE: The above certification is required by the Equal Employment Opportunity regulations of the Secretary of Labor (41 CFR 60-1.7(b) (1)), and must be submitted by bidders and proposed subcontractors only in connection with contracts and subcontracts which are subject to the equal opportunity clause. Contracts and subcontracts which are exempt from the equal opportunity clause are set forth in 41 CFR 60-1.5 (Generally only contracts or subcontracts of $10,000 or under are exempt.) Currently, Standard Form 100 (EEO-1) is the only report required by the Executive Orders or their implementing regulations.

Proposed prime contractors and subcontractors who have participated in a previous contract or subcontract subject to the Executive Orders and have not filed the required reports should note that 41 CFR 60-1.7 (b) (1) prevents the award of contracts and subcontracts unless such contractor submits a report covering the delinquent period or such other period specified by the Federal Highway Administration, or by the Director, Office of Federal Contract Compliance, U.S. Department of Labor.

STATE OF VERMONT
AGENCY OF TRANSPORTATION
CERTIFICATE OF COMPLIANCE

For a bid/proposal to be considered valid, this form must be completed in its entirety, executed by a duly authorized representative of the bidder, and submitted as part of the response to the proposal.

A. **NON-COLLUSION:** The undersigned certifies under the penalties of perjury under the laws of the State of Vermont and the United States that it has not, either directly or indirectly, entered into any agreement, participated in any collusion, or otherwise taken any action, in restraint of free competitive bidding in connection with the submitted bid/proposal.

B. **DEBARMENT:** The undersigned certifies under the penalties of perjury under the laws of the State of Vermont and the United States that it:

1. Is not presently debarred, suspended, proposed for debarment, declared ineligible, or voluntarily excluded from participating in covered transactions by any Federal department or agency; and

2. Has not within a three-year period preceding this bid/proposal been convicted of or had a civil judgment rendered against them for commission of fraud or a criminal offense in connection with obtaining, attempting to obtain, or performing a public (Federal, State, or local) transaction or contract under a public transaction; violation of Federal or State antitrust statutes or commission of embezzlement, theft, forgery, bribery, falsification or destruction of records, making false statements, or receiving stolen property; and

3. Is not presently indicted for, or otherwise criminally or civilly charged by a governmental entity (Federal, State, or local) with commission of any of the offenses enumerated in paragraph 2 above; and

4. Has not within a three-year period preceding this application/proposal had one or more public transactions (Federal, State or local) terminated for cause or default.

5. **Where the prospective participant is unable to certify to any of the statements in this certification, such prospective participant shall attach an explanation to this bid/proposal, including whom it applies and dates of action. Exceptions will not necessarily result in denial of award but will be considered in determining bidder eligibility and/or responsibility. Providing false information may result in criminal prosecution or administration sanctions.**

C. **BYRD ANTI-LOBBYING:** The undersigned hereby certifies, by signing and submitting this bid/proposal, to the best of his or her knowledge and belief, that:

1. No Federal appropriated funds have been paid or will be paid, by or on behalf of the undersigned, to any person for influencing or attempting to influence an officer or

employee of any Federal agency, a Member of Congress, an officer or employee of Congress, or an employee of a Member of Congress in connection with the awarding of any Federal contract, the making of any Federal grant, the making of any Federal loan, the entering into of any cooperative agreement, and the extension, continuation, renewal, amendment, or modification of any Federal contract, grant, loan, or cooperative agreement.

2. If any funds other than Federal appropriated funds have been paid or will be paid to any person for influencing or attempting to influence an officer or employee of any Federal agency, a Member of Congress, an officer or employee of Congress, or an employee of a Member of Congress in connection with this Federal contract, grant, loan, or cooperative agreement, the undersigned shall complete and submit Standard Form-LLL, "Disclosure Form to Report Lobbying," in accordance with its instructions.

3. This certification is a material representation of fact upon which reliance was placed when this transaction was made or entered into. Submission of this certification is a prerequisite for making or entering into this transaction as required by 31 U.S.C. 1352. Any person who fails to file the required certification shall be subject to a civil penalty of not less than $10,000 and not more than $100,000 for each such failure.

4. The undersigned also agrees by submitting its bid/proposal that the participant shall require that the language of this certification be included in all lower tier subcontracts, which exceed $100,000 and that all such recipients shall certify and disclose accordingly.

E. **WORKER CLASSIFICATION COMPLIANCE REQUIREMENT:** In accordance with Section 32 of The Vermont Recovery and Reinvestment Act of 2009 (Act No. 54), the following provisions and requirements apply to the undersigned when the total project costs exceed $250,000.00.

Bidder is required to self-report the following information relating to past violations, convictions, suspensions, and any other information related to past performance and likely compliance with proper coding and classification of employees. The Agency of Transportation is requiring information on any incidents that occurred in the previous 12 months. Attach additional pages as necessary. **If not applicable, please enter 'Not Applicable' or 'N/A' below.**

Summary of Detailed Information	Date of Notification	Outcome

Bidder hereby certifies that the company/individual is in compliance with the requirements as detailed in Section 32 of Act 54(2009), as amended by Section 17 of Act 142 (2010) and further amended by Section 6 of Act 50 (2011).

Subcontractor Reporting.

A. **Contracts for Services.** The undersigned hereby acknowledges and agrees that if it is a successful bidder, prior to execution of any contract resulting from this solicitation, the undersigned will provide to the State a list of all proposed subcontractors and subcontractors' subcontractors, together with the identity of those subcontractors' workers compensation insurance providers, and additional required or requested information, as applicable, in accordance with Section 32 of The Vermont Recovery and Reinvestment Act of 2009 (Act No. 54), the undersigned will provide any update of such list to the State as additional subcontractors are hired. The undersigned further acknowledges and agrees that the failure to submit subcontractor reporting in accordance with Section 32 of The Vermont Recovery and Reinvestment Act of 2009 (Act No. 54) will constitute non-compliance and may result in cancellation of contract and/or restriction from bidding on future state contracts.

B. **Construction Contracts**. The Contractor is required to provide a list of subcontractors on the job along with lists of subcontractor's subcontractors and by whom those subcontractors are insured for workers' compensation purposes. This is not a requirement for subcontractor's providing supplies only and no labor to the overall contract or project.

   Additionally, the Contractor shall collect and retain evidence of subcontractors' workers' compensation insurance, such as the ACORD insurance coverage summary sheet. Agency of Transportation will periodically verify the Contractor's compliance.

This information must be updated as necessary and provided to the State as additional subcontractors are hired. If none, please enter 'Not Applicable' or 'N/A' below.

Sub-Contractor	Insured By	Sub-Contractor's Sub	Insured By

The undersigned further acknowledges and agrees that the failure to submit subcontractor reporting in accordance with Section 32 of The Vermont Recovery and Reinvestment Act of 2009 (Act No. 54), and as amended will constitute non-compliance and may result in cancellation of contract and/or restriction from bidding on future state contracts.

As a duly authorized representative of the bidder, I hereby certify that the information above is true and correct.

Date: _____

Duly Authorized Signature: _____

Name and Title of Person Signing: _____
(Duly Authorized Signer)

Company Name: _____

Company Address: _____

_____

E-Mail Address: _____

Minimum Labor and Truck Rates
Under Title 19, Vermont Statutes
Annotated Section 18, as amended

STATE OF VERMONT
AGENCY OF TRANSPORTATION
MONTPELIER

FOR OTHER THAN FEDERAL-AID. In accordance with the provisions of Title 19, VSA, Section 18, the following minimum rate for labor shall apply to this project:

> The minimum wage for common labor will not be less than the State or Federal minimum wage, whichever is higher.

ON FEDERAL-AID PROJECTS ONLY.

> The minimum rates for labor for Federal-Aid Projects shall be those set in the Wage Determination Decision of the U.S. Secretary of Labor for each project in accordance with the Federal-Aid Highway Act of 1956. When such wage rates are required they shall be included in the proposal. In the event these rates are lower than the Vermont rates, the Vermont rates shall prevail.

TRUCK RATES. In accordance with the provisions of Title 19, VSA, Section 18, the following minimum rates for trucks shall apply to this project:

Trucks, not Including Driver Water Level Body Capacity	Minimum Rates Per YD per Hr.
Trucks, Equipment Loaded	$1.65

STATE OF VERMONT

AGENCY OF TRANSPORTATION

MONTPELIER

COMMODITY INDEX PRICES.

(a) Price Adjustment, Asphalt. When Item 690.0300 is included in the Contract, asphalt price adjustment will be performed according to the requirements of Section 690 for all asphalt and emulsified asphalt incorporated into the work, including that incorporated under Special Specification pay items.

(b) Price Adjustment, Fuel. When Item 690.0400 is included in the Contract, fuel price adjustment will be performed according to the requirements of Section 690 for the pay items specified therein, and for any pay items identified in the Special Provisions as being eligible for fuel price adjustment.

(c) Commodity Index Prices. The Index Prices for asphalt and fuel for this Contract are specified in Table 1.

TABLE 1 – COMMODITY INDEX PRICES FOR THIS CONTRACT

	Asphalt (dollars/ton)	Fuel (dollars/gallon)
Index Price	$803.00	$6.48

VERMONT AGENCY OF TRANSPORTATION
PROPOSAL SCHEDULE OF PAY ITEMS

LETTING DATE: 11/13/2026 11:00 AM

CONTRACT ID:C03295

PROJECT(S):PLYMOUTH ER P23-1(327) &
PLYMOUTH ER P23-1(328)

ITEM NO.	DESCRIPTION	QUANTITY	UNITS
ITEMS COMMON TO ALL ALTERNATES			
199.8101	INCENTIVE OR DISINCENTIVE (N.A.B.I.) (BRIDGE 4)	136,080.000	DL
199.8101	INCENTIVE OR DISINCENTIVE (N.A.B.I.) (BRIDGE 7)	131,000.000	DL
201.1000	CLEARING AND GRUBBING, INCLUDING INDIVIDUAL TREES AND STUMPS (BRIDGE 4)	1.000	LS
201.1000	CLEARING AND GRUBBING, INCLUDING INDIVIDUAL TREES AND STUMPS (BRIDGE 7)	1.000	LS
203.1500	COMMON EXCAVATION	1,890.000	CY
203.1600	SOLID ROCK EXCAVATION	57.000	CY
203.2700	UNCLASSIFIED CHANNEL EXCAVATION	1,320.000	CY
203.3000	EARTH BORROW	105.000	CY
204.2200	TRENCH EXCAVATION OF EARTH, EXPLORATORY (N.A.B.I.)	2.000	CY
204.2500	STRUCTURE EXCAVATION	1,350.000	CY
204.3000	GRANULAR BACKFILL FOR STRUCTURES	450.000	CY
210.1000	COARSE-MILLING, BITUMINOUS PAVEMENT	325.000	SY
225.0500	RETAINING WALL, CONCRETE (BRIDGE 7)	1.000	LS
301.3500	SUBBASE OF DENSE GRADED CRUSHED STONE	1,500.000	CY
401.1000	AGGREGATE SURFACE COURSE	58.000	CY
404.1100	TACK COAT, EMULSIFIED ASPHALT	20.000	CWT
406.0230	BITUMINOUS CONCRETE PAVEMENT, TYPE IIS, QA TIER III	264.000	TON
406.1430	BITUMINOUS CONCRETE PAVEMENT, TYPE IVSB, QA TIER III	420.000	TON
406.3400	BITUMINOUS CONCRETE PAVEMENT, NON-PAVER PLACED, TYPE IVS	182.000	SY
406.9100	PAY ADJUSTMENT, BCP, MIXTURE PROPERTIES (N.A.B.I.)	2.000	DL
406.9200	PAY ADJUSTMENT, BCP, MAT DENSITY (N.A.B.I.)	2.000	DL
501.3700	PERFORMANCE-BASED CONCRETE, CLASS PCD	13.000	CY
501.3800	PERFORMANCE-BASED CONCRETE, CLASS PCS	115.000	CY
504.1000	FURNISHING EQUIPMENT FOR DRIVING PILING (BRIDGE 7)	1.000	LS
505.2000	STEEL PILING, HP 14 × 117 (BRIDGE 7)	600.000	LF
505.4500	DYNAMIC PILE LOADING TEST	2.000	EACH
507.1100	REINFORCING STEEL, LEVEL I	13,015.000	LB
507.1200	REINFORCING STEEL, LEVEL II	3,935.000	LB
510.2500	PRESTRESSED CONCRETE SOLID SLABS (SDB40-18, BRIDGE 4)	305.000	LF
510.2500	PRESTRESSED CONCRETE SOLID SLABS (SDB40-21, BRIDGE 7)	395.000	LF
514.1000	WATER REPELLENT, SILANE	3.000	GAL
519.1000	MEMBRANE WATERPROOFING, SPRAY APPLIED	340.000	SY
524.1100	JOINT SEALER, HOT POURED	315.000	LF
525.3130	BRIDGE RAILING, GALVANIZED 3 RAIL BOX BEAM	210.000	LF
529.1500	REMOVAL OF STRUCTURE (BRIDGE 4, 1,181 SF - EST)	1.000	EACH
529.1500	REMOVAL OF STRUCTURE (BRIDGE 7, 1,099 SF - EST)	1.000	EACH
531.1700	BEARING DEVICE ASSEMBLY, STEEL REINFORCED ELASTOMERIC PAD	42.000	EACH
540.1000	PRECAST CONCRETE STRUCTURE (ABUTMENT 1 - BRIDGE 4)	1.000	LS
540.1000	PRECAST CONCRETE STRUCTURE (ABUTMENT 1 - BRIDGE 7)	1.000	LS
540.1000	PRECAST CONCRETE STRUCTURE (ABUTMENT 2 - BRIDGE 4)	1.000	LS
540.1000	PRECAST CONCRETE STRUCTURE (ABUTMENT 2 - BRIDGE 7)	1.000	LS
540.1000	PRECAST CONCRETE STRUCTURE (APPROACH SLAB 2 - BRIDGE 4)	1.000	LS
540.1000	PRECAST CONCRETE STRUCTURE (APPROACH SLAB 1 - BRIDGE 4)	1.000	LS
540.1000	PRECAST CONCRETE STRUCTURE (APPROACH SLAB 1 - BRIDGE 7)	1.000	LS

VERMONT AGENCY OF TRANSPORTATION
PROPOSAL SCHEDULE OF PAY ITEMS

LETTING DATE: 11/13/2026 11:00 AM

CONTRACT ID:C03295

PROJECT(S):PLYMOUTH ER P23-1(327) &
PLYMOUTH ER P23-1(328)

ITEM NO.	DESCRIPTION	QUANTITY	UNITS
540.1000	PRECAST CONCRETE STRUCTURE (APPROACH SLAB 2 - BRIDGE 7)	1.000	LS
541.4500	FLOWABLE FILL	35.000	CY
542.1000	HIGH PERFORMANCE CONCRETE, RAPID SET	104.000	CY
547.1000	MICROPILE, CASED	573.000	LF
547.1500	MICROPILE, UNCASED	224.000	LF
547.2000	MICROPILE OBSTRUCTION DRILLING AND REMOVAL	160.000	LF
547.2500	FURNISHING EQUIPMENT FOR INSTALLING MICROPILES (BRIDGE 4)	1.000	LS
604.4000	CHANGING ELEVATION OF DIS, CATCH BASINS, OR MANHOLES	1.000	EACH
609.1000	DUST CONTROL WITH WATER	108.000	MGAL
613.0602	E-STONE FILL, TYPE II	480.000	CY
613.0604	E-STONE FILL, TYPE IV	425.000	CY
614.2000	IN-WATER SEDIMENT ISOLATION MEASURES (BRIDGE 4)	1.000	LS
614.2000	IN-WATER SEDIMENT ISOLATION MEASURES (BRIDGE 7)	1.000	LS
616.2502	PRECAST REINFORCED CONCRETE CURB, TYPE B	170.000	LF
617.1100	REMOVE AND RESET MAILBOX, SINGLE SUPPORT	4.000	EACH
619.1700	YIELDING MARKER POSTS	1.000	EACH
621.0100	REMOVAL OF GUARDRAIL	442.000	LF
621.1060	STEEL BEAM GUARDRAIL	258.000	LF
621.1530	ANCHOR FOR STEEL BEAM GUARDRAIL, MGS	4.000	EACH
621.2400	TEMPORARY TRAFFIC BARRIER	63.000	LF
621.8130	GUARDRAIL APPROACH SECTION, 3 RAIL BOX BEAM	8.000	EACH
630.1000	UNIFORMED TRAFFIC OFFICERS	504.000	HR
630.1500	FLAGGERS	1,008.000	HR
631.1000	FIELD OFFICE, ENGINEER'S	1.000	LS
631.1600	TESTING EQUIPMENT, CONCRETE	1.000	LS
631.1700	TESTING EQUIPMENT, BITUMINOUS	1.000	LS
631.1900	TESTING EQUIPMENT, GROUT	1.000	LS
631.2600	FIELD OFFICE COMMUNICATIONS (N.A.B.I.)	6,000.000	DL
633.1000	CPM SCHEDULE	8.000	EACH
635.1100	MOBILIZATION/DEMOBILIZATION (BRIDGE 4)	1.000	LS
635.1100	MOBILIZATION/DEMOBILIZATION (BRIDGE 7)	1.000	LS
641.1100	TRAFFIC CONTROL, ALL-INCLUSIVE (BRIDGE 4)	1.000	LS
641.1100	TRAFFIC CONTROL, ALL-INCLUSIVE (BRIDGE 7)	1.000	LS
641.1500	PORTABLE CHANGEABLE MESSAGE SIGN	6.000	EACH
646.4040	DURABLE 4 INCH WHITE LINE, POLYUREA	1,575.000	LF
646.4140	DURABLE 4 INCH YELLOW LINE, POLYUREA	1,575.000	LF
646.6020	TEMPORARY 4 INCH WHITE LINE, PAINT	3,150.000	LF
646.6120	TEMPORARY 4 INCH YELLOW LINE, PAINT	3,150.000	LF
646.7600	LINE STRIPING TARGETS	320.000	EACH
649.1100	GEOTEXTILE FOR ROADBED SEPARATOR	2,080.000	SY
651.1500	TURF ESTABLISHMENT, GENERAL SEED	2,420.000	SY
651.3500	TOPSOIL	270.000	CY
651.4012	GRUBBING MATERIAL, 12 INCH	310.000	SY
653.0100	EPSC PLAN (BRIDGE 4)	1.000	LS
653.0100	EPSC PLAN (BRIDGE 7)	1.000	LS

VERMONT AGENCY OF TRANSPORTATION
PROPOSAL SCHEDULE OF PAY ITEMS

LETTING DATE: 11/13/2026 11:00 AM

CONTRACT ID:C03295

PROJECT(S):PLYMOUTH ER P23-1(327) &
PLYMOUTH ER P23-1(328)

ITEM NO.	DESCRIPTION	QUANTITY	UNITS
653.0200	MONITORING EPSC PLAN	50.000	HR
653.0300	MAINTENANCE OF EPSC PLAN (N.A.B.I.)	4,000.000	DL
653.1000	HAY MULCH	8.500	TON
653.2001	ROLLED EROSION CONTROL PRODUCT, TYPE I	2,420.000	SY
653.3400	STABILIZED CONSTRUCTION ENTRANCE	4.000	EACH
653.4001	INLET PROTECTION DEVICE, TYPE I	1.000	EACH
653.4003	INLET PROTECTION DEVICE, TYPE III	1.000	CY
653.4702	SILT FENCE, TYPE II	950.000	LF
653.5000	BARRIER FENCE	450.000	LF
653.5500	PROJECT DEMARCATION FENCE	935.000	LF
656.8500	TREE PROTECTION (BRIDGE 7)	1.000	LS
675.2000	TRAFFIC SIGN, FLAT SHEET ALUMINUM	2.000	SF
675.3410	SQUARE TUBE SIGN POST AND ANCHOR	40.000	LF
675.5000	SIGN REMOVAL, FLAT SHEET ALUMINUM	4.000	EACH
676.1000	DELINEATOR WITH STEEL POST	7.000	EACH
690.0300	PRICE ADJUSTMENT, ASPHALT (N.A.B.I.)	2.000	DL